DVP-M35

RMT-D102E

SERVICE MANUAL

Self Diagnostics
Supported model

Chinese Model
Hong Kong Model
Spanish Model
E Model

- **Refer to the OPERATION MANUAL (9-921-669-21) and DVD MECHANISM OPERATION MANUAL (9-921-669-31) for DVD mechanism.**

DVD VIDEO
COMPACT disc DIGITAL VIDEO

SPECIFICATIONS

CD/DVD player

Signal format system	PAL/NTSC

Audio characteristics

Frequency response	DVD (PCM96kHz): 2 Hz to 44 kHz (±0.5 dB)* DVD (PCM48kHz): 2 Hz to 22 kHz (±0.5 dB) CD: 2 Hz to 20 kHz (±0.5 dB)
Signal-to-noise ratio	More than 110 dB (LINE OUT (AUDIO 1, 2) connectors only)
Harmonic distortion	Less than 0.0028%
Dynamic range	DVD: More than 100 dB CD: More than 97 dB
Wow and flutter	Less than detected value (±0.001% W PEAK)

Outputs and inputs

	Jack type	Output level	Load impedance
LINE OUT (AUDIO 1, 2)	Phono jacks	2 Vrms (at 50 kilohms)	Over 10 kilohms
DIGITAL OUT (OPTICAL)	Optical output connector	–18 dBm	Wave length: 660 nm
DIGITAL OUT (COAXIAL)	Phono jacks	0.5 Vp-p	75 ohms terminated
LINE OUT (VIDEO 1, 2)	Phono jack	1.0 Vp-p	75 ohms, sync negative
S VIDEO OUT 1, 2	4-pin mini DIN	Y: 1.0 Vp-p C: 0.3 Vp-p	75 ohms, sync negative 75 ohms terminated
PHONES	Phone jack	12 mW	32 ohms

General

Power requirements	220 to 240 V AC, 50 Hz 110 to 240 V AC, 50/60 Hz See page 2 for further informations.
Power consumption	18 W
Dimensions (approx.)	280 × 91 × 333 mm (w/h/d) incl. projecting parts
Mass (approx.)	3.4 kg
Operating temperature	5 °C to 35 °C
Operating humidity	5% to 90%

Supplied accessories

See page 6.

* When you play the PCM sound tracks with 96 kHz sampling frequency, the output signals from the DIGITAL OUT (OPTICAL, COAXIAL) connectors are converted to 48 kHz (sampling frequency) / 16 bits (quantization bits).

Design and specifications are subject to change without notice.

CD/DVD PLAYER

MICROFILM

SONY®

WARNING!!

WHEN SERVICING, DO NOT APPROACH THE LASER EXIT WITH THE EYE TOO CLOSELY. IN CASE IT IS NECESSARY TO CONFIRM LASER BEAM EMISSION, BE SURE TO OBSERVE FROM A DISTANCE OF MORE THAN 25 cm FROM THE SURFACE OF THE OBJECTIVE LENS ON THE OPTICAL PICK-UP BLOCK.

CAUTION:
The use of optical instrument with this product will increase eye hazard.

CAUTION
Use of controls or adjustments or performance procedures other than those specified herein may result in hazardous radiation exposure.

NOTE
There is no screw at three screwing marked " ⟹ " positions on the bottom originally at the factory.
But there is no problem when screwing in using the screws 3 mm (dia.) × 10 mm (length).

— Bottom View —

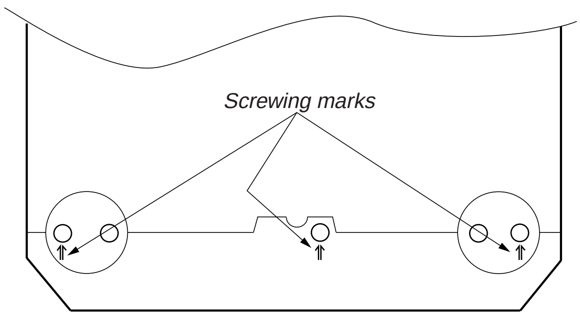

(Front Side)

SAFETY-RELATED COMPONENT WARNING!!

COMPONENTS IDENTIFIED BY MARK ⚠ OR DOTTED LINE WITH MARK ⚠ ON THE SCHEMATIC DIAGRAMS AND IN THE PARTS LIST ARE CRITICAL TO SAFE OPERATION. REPLACE THESE COMPONENTS WITH SONY PARTS WHOSE PART NUMBERS APPEAR AS SHOWN IN THIS MANUAL OR IN SUPPLEMENTS PUBLISHED BY SONY.

SAFETY CHECK-OUT

After correcting the original service problem, perform the following safety checks before releasing the set to the customer.

1. Check the area of your repair for unsoldered or poorly-soldered connections. Check the entire board surface for solder splashes and bridges.
2. Check the interboard wiring to ensure that no wires are "pinched" or contact high-wattage resistors.
3. Look for unauthorized replacement parts, particularly transistors, that were installed during a previous repair. Point them out to the customer and recommend their replacement.
4. Look for parts which, through functioning, show obvious signs of deterioration. Point them out to the customer and recommend their replace-ment.
5. Check the B+ voltage to see it is at the values specified.
6. Flexible Circuit Board Repairing
   - Keep the temperature of the soldering iron around 270˚C during repairing.
   - Do not touch the soldering iron on the same conductor of the circuit board (within 3 times).
   - Be careful not to apply force on the conductor when soldering or unsoldering.

TABLE OF CONTENTS

SERVICE NOTE

1. DISK REMOVAL PROCEDURE (at POWER OFF) 4
2. NOTE ON MOUNTING SLED MOTOR 4
3. REPLACING OPTICAL PICK-UP 5
3-1. Handling 5
4. NOTE ON ASSEMBLING MECHANICAL DECK 6
4-1. Application of Grease 6
4-2. Cleaning Spindle Motor Turntable 7
4-3. Aligning Phase of Cam Gear and Drive Gear 7
4-4. Deformation of Insulator 7
4-5. Note on connecting OPT Harness 7
4-6. Note on Mounting FG-43 Board 8
4-7. Note on Mounting TK-47 Board 8

1. GENERAL

Getting Started
- Unpacking 1-1
- Hooking Up the System 1-1
- Necessary Setup Before Using the Player 1-1
- Selecting the Language for On-screen Display 1-1

Basic Operations
- Playing a DVD 1-2
- Playing a CD/VIDEO CD 1-3

Playing Discs in Various Modes
- Using the On-Screen Display 1-4
- Using the Front Panel Display 1-4
- Playing Repeatedly (Repeat Play) 1-5
- Playing in Random Order (Shuffle Play) 1-5
- Creating Your Own Program (Program Play) 1-5
- Resuming Playback from the Point Where You Stopped a Disc (Resume Play) 1-6
- Reducing the Picture Noise (DNR: Digital Video Noise Reduction) 1-6
- Changing the Sounds 1-6
- Displaying the Subtitles 1-6
- Changing the Angles 1-6
- Limiting Playback by Children (Parental Control) 1-6
- Controlling the TV or the amplifier with the Supplied Remote 1-7

Settings and Adjustments
- Using the Setup Display 1-8
- Setting the Language for Displaying and Sound (LANGUAGE SETUP) 1-8
- Settings for Display (INITIAL SETUP 1) 1-8
- Settings for Sound (INITIAL SETUP 2) 1-8

Additional Information
- Precautions 1-9
- Notes on Discs 1-9
- Troubleshooting 1-9
- Self-diagnosis Function 1-9
- Index to Parts and Controls 1-10
- Setup Display Item List 1-10
- Language Code List 1-11

2. DISASSEMBLY

2-1. UPPER CASE 2-1
2-2. FRONT PANEL BLOCK ASSEMBLY 2-1
2-3. AU-199 BOARD 2-2
2-4. MB-78 BOARD 2-2
2-5. TK-47 BOARD, MECHANISM DECK 2-3
2-6. TRAY 2-3
2-7. OPTICAL DEVICE 2-4
2-8. INTERNAL VIEWS 2-4
2-9. CIRCUIT BOARDS LOCATION 2-5

3. BLOCK DIAGRAMS

3-1. OVERALL BLOCK DIAGRAM 3-1
3-2. RF/SERVO BLOCK DIAGRAM 3-3
3-3. VIDEO/AUDIO BLOCK DIAGRAM 3-5
3-4. SYSTEM CONTROL BLOCK DIAGRAM 3-7
3-5. MODE CONTROL BLOCK DIAGRAM 3-9
3-6. POWER SUPPLY BLOCK DIAGRAM 3-11

4. PRINTED WIRING BOARDS AND SCHEMATIC DIAGRAMS

4-1. FRAME SCHEMATIC DIAGRAM 4-1
4-2. PRINTED WIRING BOARDS AND SCHEMATIC DIAGRAMS 4-3
- TK-47 (RF, SERVO) PRINTED WIRING BOARD 4-4
- TK-47 (RF, SERVO) SCHEMATIC DIAGRAM 4-7
- MB-78 (VIDEO, SERVO/SYSTEM CONTROL, AUDIO) PRINTED WIRING BOARD 4-12
- MB-78 (DSP) SCHEMATIC DIAGRAM 4-17
- MB-78 (AV DECODER) SCHEMATIC DIAGRAM 4-20
- MB-78 (VIDEO ENCODER) SCHEMATIC DIAGRAM 4-23
- MB-78 (INTERFACE) SCHEMATIC DIAGRAM 4-26
- MB-78 (MOTOR DRIVE) SCHEMATIC DIAGRAM 4-29
- MB-78 (POWER SUPPLY) SCHEMATIC DIAGRAM 4-31
- MB-78 (DIGITAL PROCESS 1) SCHEMATIC DIAGRAM 4-33
- MB-78 (DIGITAL PROCESS 2) SCHEMATIC DIAGRAM 4-37
- FG-43 (SLED MOTOR), HP-98 (PHONES) PRINTED WIRING BOARDS AND SCHEMATIC DIAGRAMS 4-41
- AU-199 (VIDEO/AUDIO INPUT/OUTPUT) SCHEMATIC DIAGRAM 4-44
- AU-199 (VIDEO/AUDIO INPUT/OUTPUT) PRINTED WIRING BOARD 4-47
- FL-90 (DISPLAY, OPERATION SWITCHES), LE-21 (LED) PRINTED WIRING BOARDS 4-49
- FL-90 (DISPLAY, OPERATION SWITCHES), LE-21 (LED) SCHEMATIC DIAGRAM 4-51
- POWER BLOCK HS-930SH (SWITCHING REGULATOR) PRINTED WIRING BOARD 4-53
- POWER BLOCK HS-930SH (SWITCHING REGULATOR) SCHEMATIC DIAGRAM 4-55
- POWER BLOCK HS-930SF (SWITCHING REGULATOR) PRINTED WIRING BOARD 4-57
- POWER BLOCK HS-930SF (SWITCHING REGULATOR) SCHEMATIC DIAGRAM 4-59

5. TEST MODE

5-1. How to Enter Test Mode 5-1
5-2. System Control Diagnosis 5-1
5-2-1. Selection of Check Items 5-2
5-2-1-1. Testing the Selected Item 5-2
5-2-1-2. Testing All Items 5-3
5-2-2. Error Display 5-3
5-2-3. Diagnosis Check Item List 5-4
5-2-4. Brief Description of Check Procedures 5-5
5-2-5. Diagnosis Error Code Table 5-17
5-3. Drive Auto Adjustment 5-18
5-3-1. [0] ALL 5-18
5-3-2. [1] DVD Single Layer Disc 5-19
5-3-3. [2] CD disc 5-20
5-3-4. [3] DVD dual layer disc 5-20
5-4. Drive Manual Operation 5-21
5-4-1. Setup Displays In Accordance With Selected Disc Type 5-21
5-4-2. Manual Control (1) 5-22
5-4-3. Manual Control (2) 5-22
5-4-4. Manual Control (3) 5-23
5-4-5. Manual Adjustment (1) 5-24
5-4-6. Manual Adjustment (2) 5-25
5-4-7. Automatic Adjustment 5-25
5-4-8. Check 5-26
5-5. Mechanism Aging 5-27
5-6. History of Emergencies 5-27
5-6-1. Hour Meter Display 5-27
5-6-2. History of Emergencies Display 5-28
5-6-3. Initialization of Emergency History 5-28
5-7. Other Checks 5-28
5-8. Appendix 5-29
5-8-1. Emergency Code Table 5-29
5-8-2. Drive Mechanism Mode Table 5-30
5-8-3. Disc Status Table 5-30
5-8-4. System Control Microprocessor Operation Mode Table 5-30

6. ELECTRICAL ADJUSTMENT

6-1. POWER SUPPLY CHECK (MB-78 board) 6-1
6-2. SYSTEM CONTROL ADJUSTMENT 6-2
1. 27MHz Free Run (MB-78 board) 6-2
6-3. VIDEO SYSTEM ADJUSTMENT 6-2
1. Video Level Adjustment (AU-199, MB-78 boards) 6-2
2. S-terminal Output Check (AU-199 board) 6-2
3. Checking Composite Video Output Y (AU-199 board) 6-3
4. Checking S Video Output S-C (AU-199 board) 6-3
5. Checking S Video Output DC Level (AU-199 board) 6-3

6-4. ADJUSTMENT RELATED PARTS ARRANGEMENT 6-4

7. REPAIR PARTS LIST

7-1. EXPLODED VIEWS
7-1-1. UPPER CASE, FRONT PANEL BLOCK ASSEMBLY 7-1
7-1-2. CHASSIS BLOCK ASSEMBLY 7-2
7-1-3. DVD MECHANISM CHASSIS BLOCK ASSEMBLY (1) 7-3
7-1-3. DVD MECHANISM CHASSIS BLOCK ASSEMBLY (2) 7-4
7-2. ELECTRICAL PARTS LIST 7-5

SERVICE NOTE

1. DISK REMOVAL PROCEDURE (at POWER OFF)

1) Insert a cross-tip screwdriver into a hole at the bottom, and rotate the cam gear ① in direction Ⓐ. (See Fig. 1)
   Note: To prevent a damage of cam gear, rotate it in direction Ⓐ by 1/4 turn.
2) Draw out the tray ② in direction Ⓑ by hand, and remove a disk. (See Fig. 1)

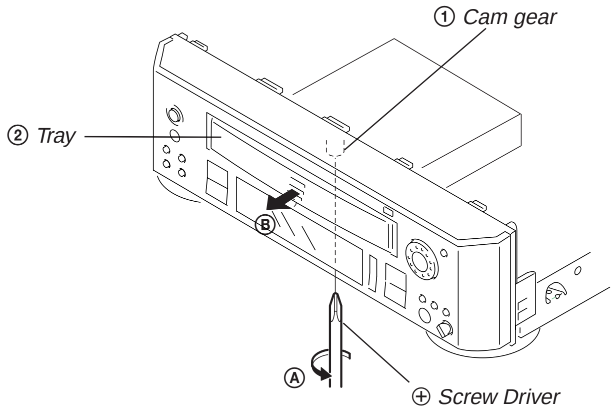

Fig. 1

2. NOTE ON MOUNTING SLED MOTOR

1) Push the sled motor assy ① toward direction A. (See Fig. 2)
2) Tighten two screws ② (M1.7 × 2.5).

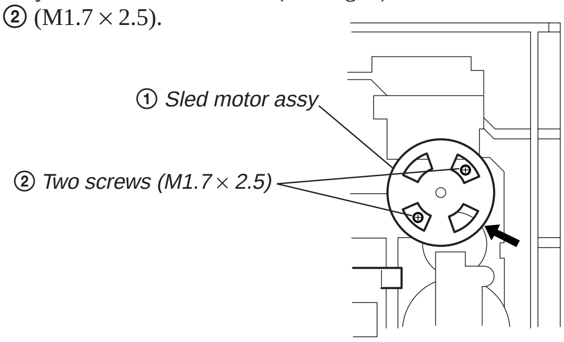

Fig. 2

3) Raising the MD block assy ③ 90 º with the side down. confirm that the optical pick-up ④ falls by self weight. (See Fig. 3)
4) Further, with the front side of MD block assy ③ up, confirm that the optical pick-up falls by self weight.

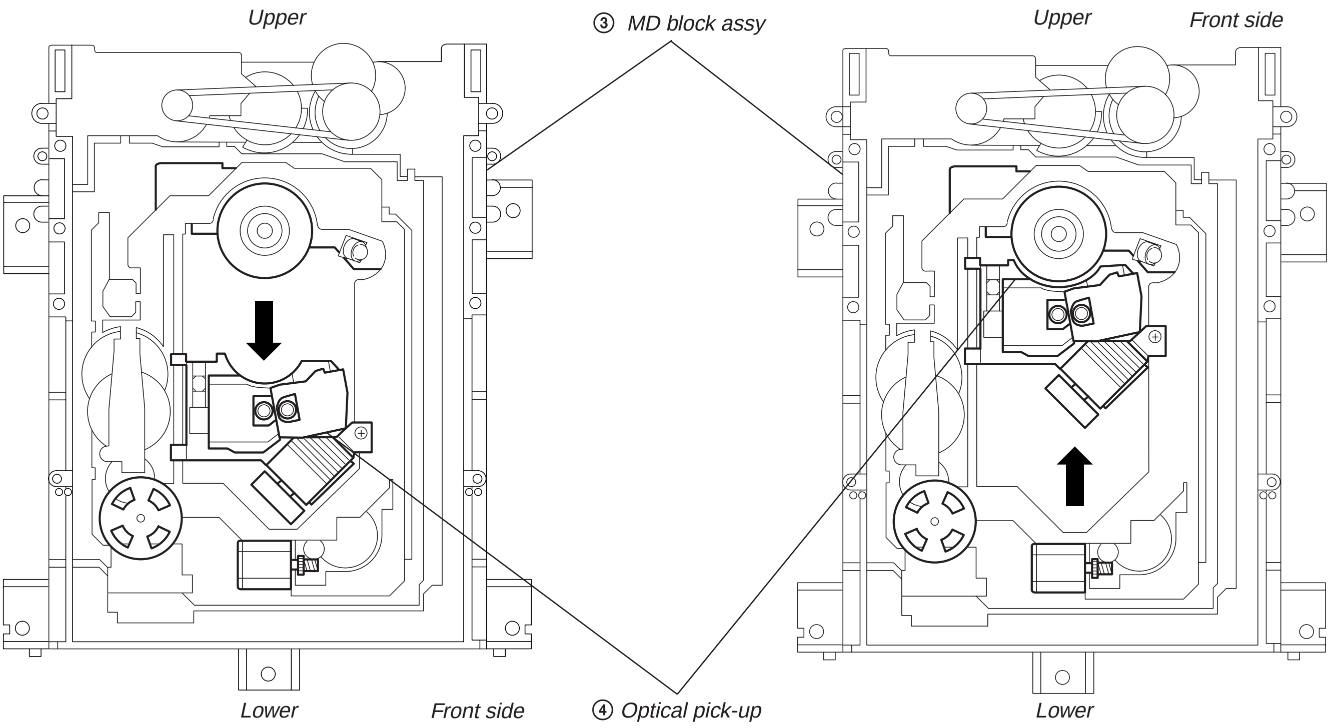

Fig. 3

3. REPLACING OPTICAL PICK-UP

3-1. Handling

1) A red laser diode for DVD requires more attention to static electricity than general infrared laser diodes for CD.
Because its durability to static electricity is far weaker than that of infrared laser diodes, always use an earth band when handling the optical pick-up block as service parts.
2) As for the flexible board KHS-180A (RP) packed as service parts, the short lands have been soldered to protect from static electricity. Accordingly, remove solders when replacing optical pick-up. (See Fig. 4)

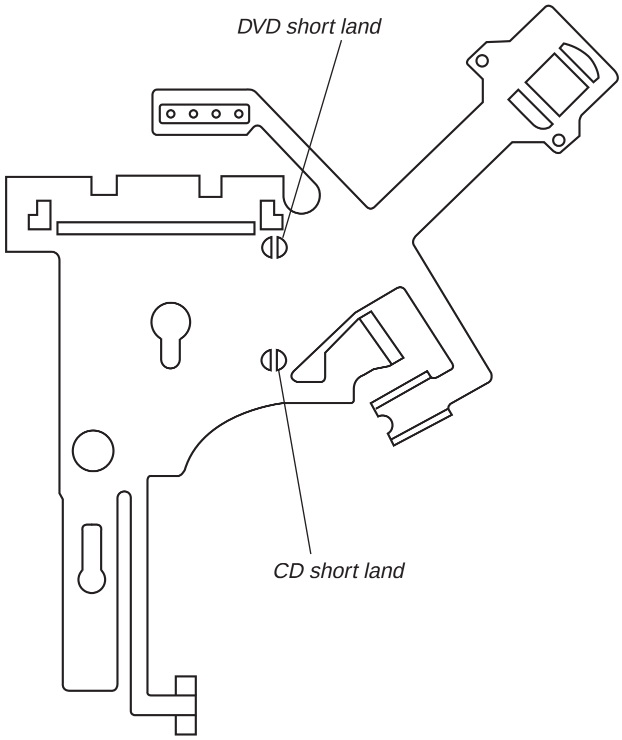

Fig. 4 Flexible board

3) In handling the KHS-180A (RP), do not touch inhibited parts shown in Fig. 5, but grip the slide base bearing and U-shaped guide.

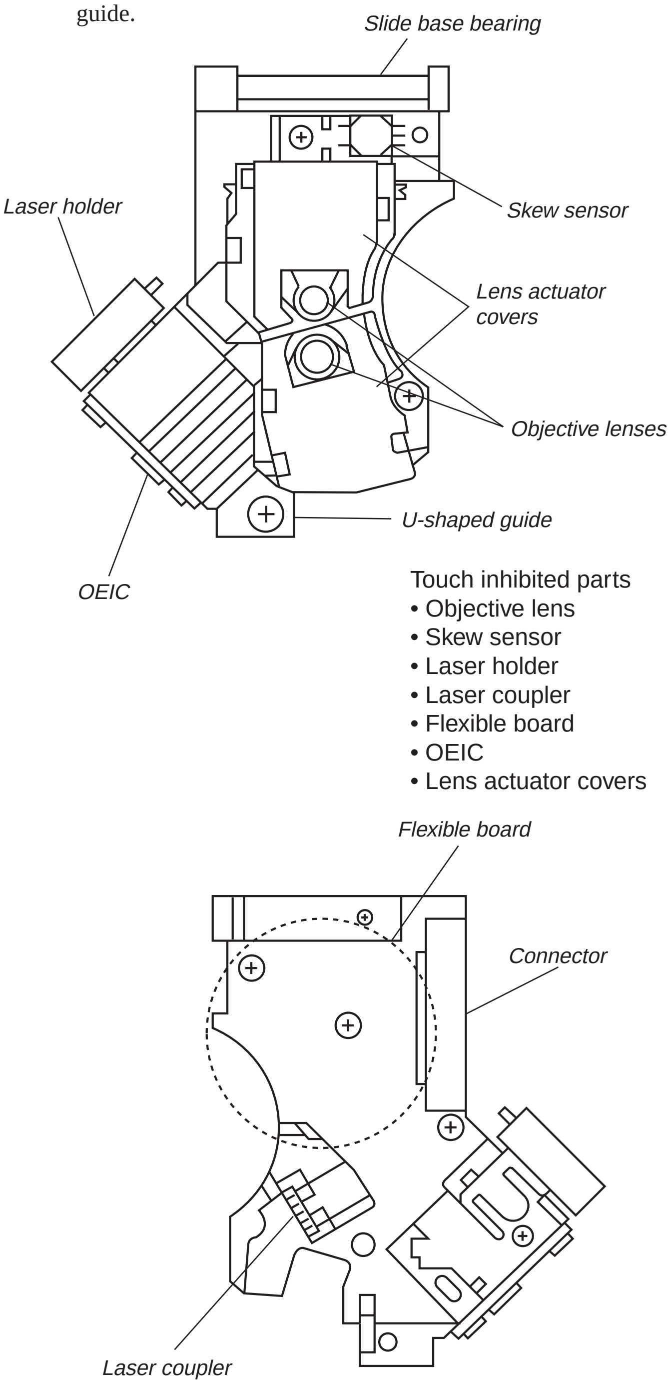

Fig. 5 KHS-180A (RP)

4. NOTE ON ASSEMBLING MECHANICAL DECK

4-1. Application of Grease

1) Grease must be applied if the following parts were replaced. (See Fig. 6)

Note 1: Recommended grease is Foil KG-70MP.

Note 2: In applying grease, take care not to allow grease to stick to other parts (particularly, rubber belt, spindle motor, and optical pick-up)

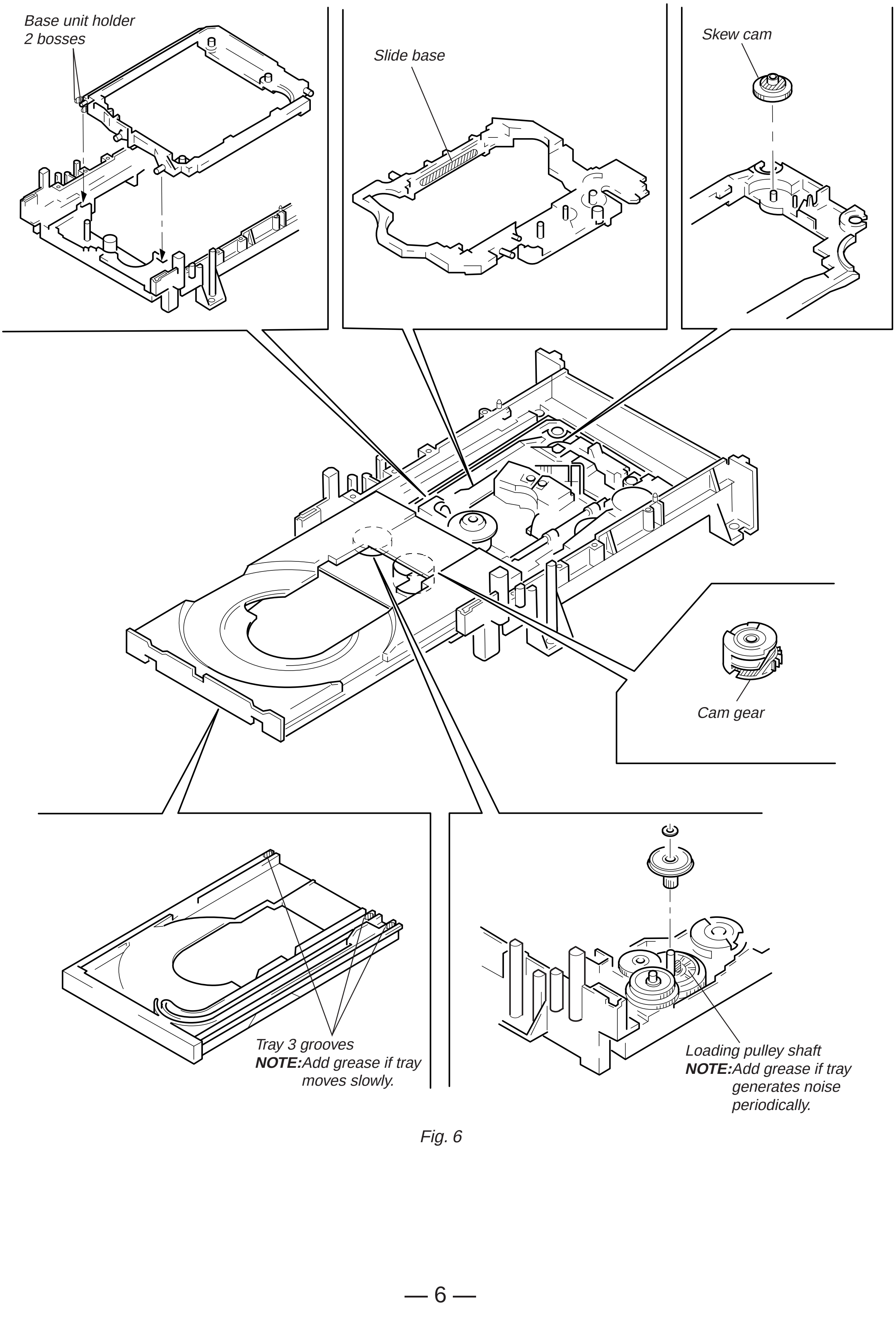

Fig. 6

4-2. Cleaning Spindle Motor Turntable

1) Remove the tray. (Refer to 2-6)
2) Clean the spindle motor turntable if disc antiskid rubber (black) is dirty. (See Fig.7)

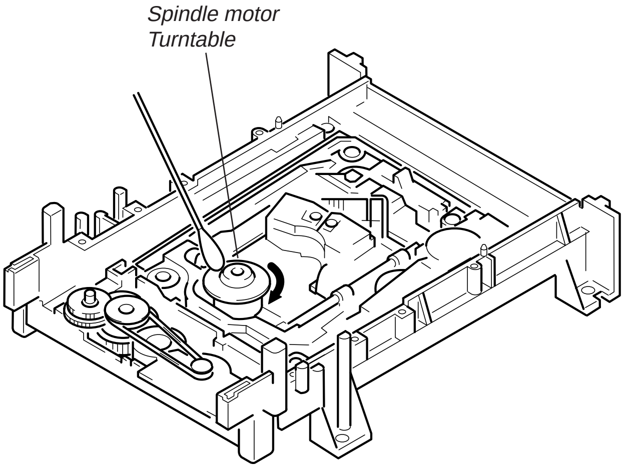

Fig. 7

4-3. Aligning Phase of Cam Gear and Drive Gear

1) Align triangle marks when assembling the cam gear and drive gear. (See Fig. 8)

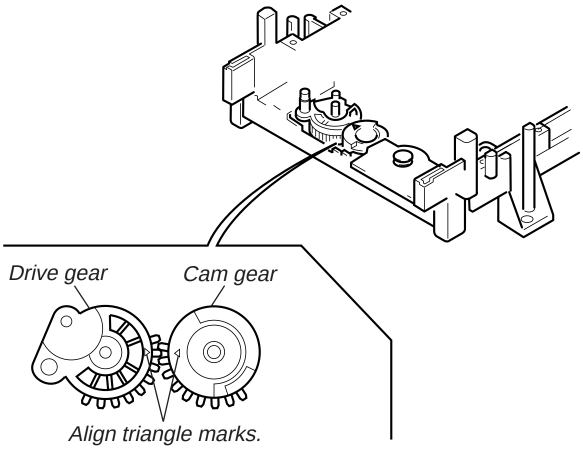

Fig. 8

4-4. Deformation of Insulator

1) Assemble the spindle base into the base unit.
2) Lock with 4 shoulder screws. (See Fig. 9)
3) Check if 4 insulators deformed. (See Fig. 9)

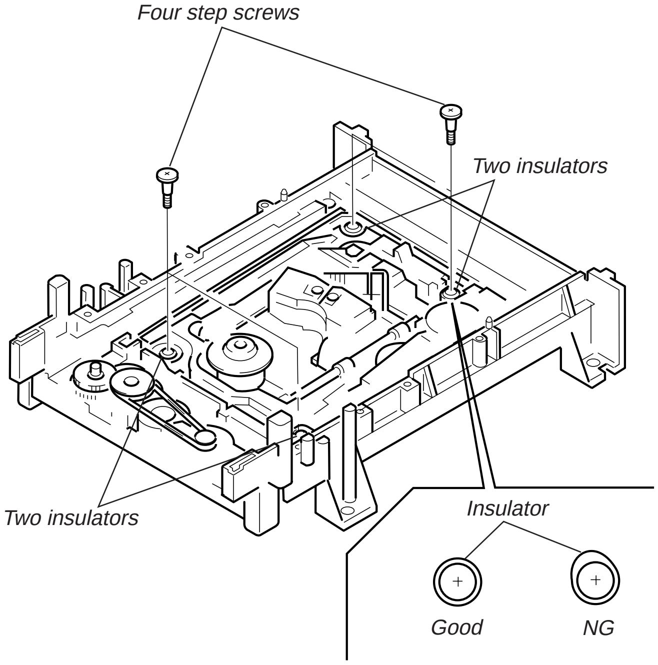

Fig. 9

4-5. Note on connecting OPT Harness

1) The optical pick-up could be destroyed unless the OPT harness is connected normally to the connector. (See Fig. 10)

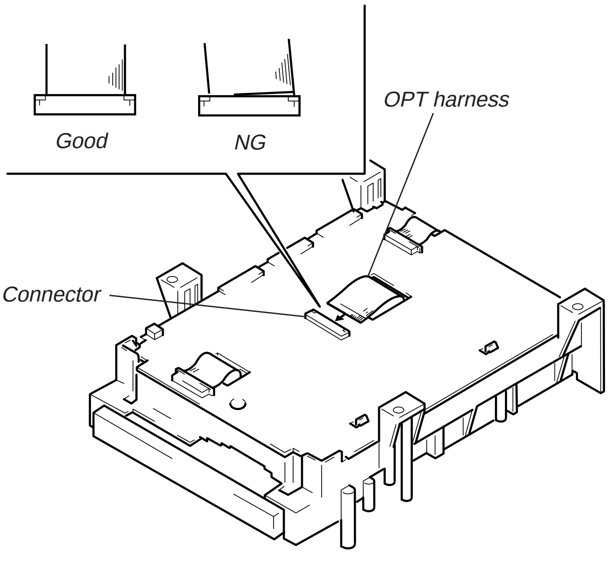

Fig. 10

4-6. Note on Mounting FG-43 Board

1) Align two bosses. (See Fig.11)
2) Fix the board securely with screws (PTPWH 2 × 5). (The sensor will not function normally if the board floats up.)

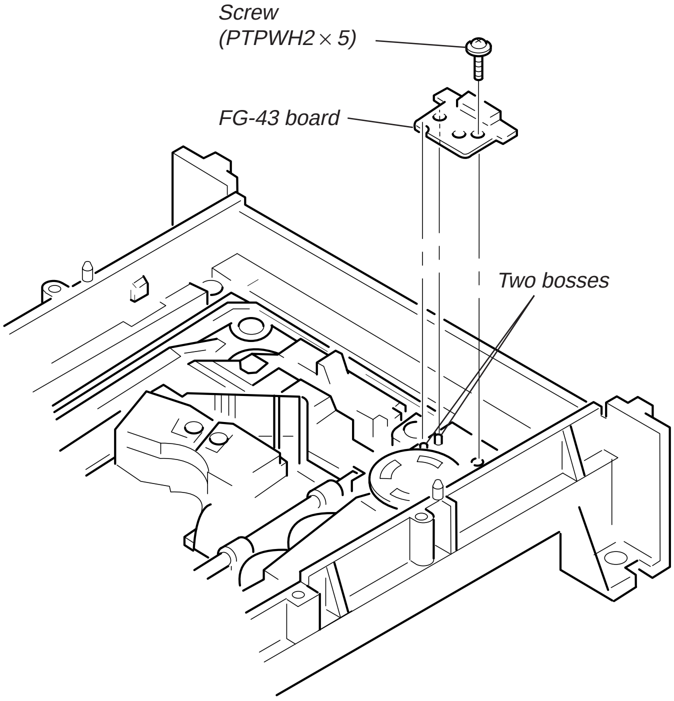

Fig. 11

4-7. Note on Mounting TK-47 Board

1) Align two bosses. (See Fig.12)
2) Align four tabs. (See Fig.12)
3) Fix the board securely with 3 screws (BV 3 × 10). (The sensor will not function normally if the board floats up.)

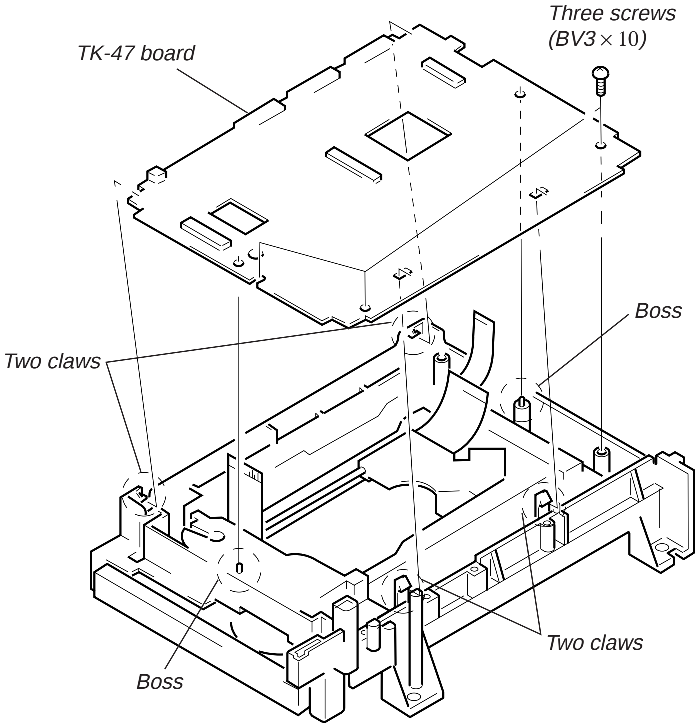

Fig.12

SECTION 1 GENERAL

This section is extracted from instruction manual.

Unpacking

Check that you have the following items:
- Audio/Video connecting cord (1)
- S video cable (1)
- Remote commander (remote) RMT-D102E (1)
- Size AA (R6) batteries (2)

Inserting batteries into the remote

You can control the player using the supplied remote. Insert two R6 (size AA) batteries by matching the + and – on the batteries. When using the remote, point it at the remote sensor ▣ on the player.

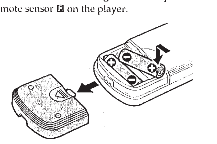

You can control Sony TVs and AV amplifiers using the supplied remote
See page 32.

Notes
- Do not leave the remote in an extremely hot or humid place.
- Do not drop any foreign object into the remote casing, particularly when replacing the batteries.
- Do not expose the remote sensor to direct sunlight or lighting apparatuses. Doing so may cause a malfunction.
- If you will not use the remote for an extended period of time, remove the batteries to avoid possible damage from battery leakage and corrosion.

Hooking Up the System

Overview

This section describes how to hook up the CD/DVD player to a TV (with audio/video input jacks) and/or an amplifier. You cannot connect this player to a TV without a video input connector. **Be sure to turn off the power of each component before making the connections.**

■To listen to the sound through TV speakers

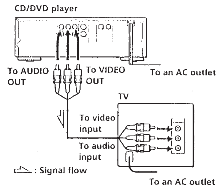

■To listen to the sound through speakers connected to an amplifier

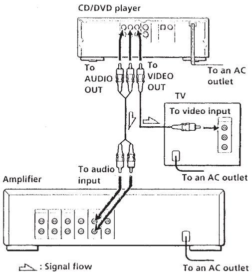

What cords will I need?

Audio/Video connecting cord (supplied) (1)

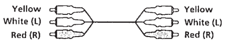

Hookups

When connecting the cords, be sure to match the color-coded cord to the appropriate jacks on the components: Yellow (video) to Yellow, Red (right) to Red and White (left) to White. Be sure to make connections firmly to avoid hum and noise.

■To listen to the sound through TV speakers
Connect the TV using the audio/video connecting cord (supplied).

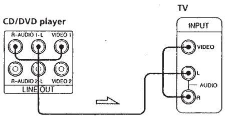

■To listen to the sound through speakers connected to an amplifier
Connect the TV using a video connecting cord (not supplied), and the amplifier using an audio connecting cable (not supplied).

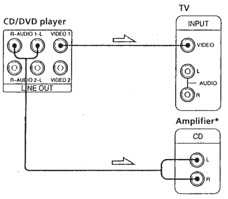

* Make the same connections when your amplifier conforms to "Pro Logic."

Notes
- Do not connect this player to a video deck. If you view the pictures on your TV after making the connections shown on the right, a picture noise may appear.

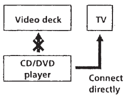

- Depending on the TV or amplifier, sound distortion may occur because the audio output level is high. In this case, set "AUDIO ATT" in "INITIAL SETUP 2" to "ON" in the setup display. For details, see page 37.

If your TV has an S video input connector
Connect the component via the S VIDEO OUT connector using the S video cable (supplied) instead of the video connecting cord. You will get a better picture.

S video cable (supplied)

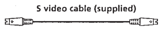

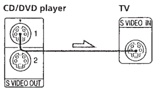

(Continued)

If you have a digital component such as an amplifier with a digital connector, DAT or MD
Connect the component via the DIGITAL OUT OPTICAL or COAXIAL connector using an optical or coaxial digital connecting cord (not supplied).
When you play a DVD, set "DIGITAL OUT" in "INITIAL SETUP 2" to "PCM" in the setup display. (page 37)

■When using an optical digital connectiong cord

Optical digital connectiong cord

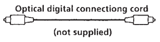

(not supplied)

Take off the cap and plug in the optical digital connectiong cord.

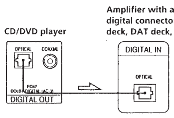

■When using a coaxial digital connectiong cord

Coaxial digital connectiong cord

(not supplied)

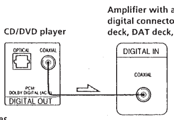

Notes
- Refer to the instructions supplied with the component to be connected.
- You cannot make digital audio recordings of discs recorded in Dolby* Digital (AC-3) format directly using an MD deck or DAT deck.

When you make the connections above, do not set "DIGITAL OUT" in "INITIAL SETUP 2" to "DOLBY DIGITAL/PCM." If you do, a loud noise will suddenly come out from the speakers, affecting your ears or causing the speakers to be damaged.

* Manufactured under license from Dolby Laboratories Licensing Corporation. "Dolby", the double-D symbol DD, "Pro Logic" and "Dolby Digital (AC-3)" are trademarks of Dolby Laboratories Licensing Corporation.

If you have a digital component with a built-in Dolby Digital decoder
Connect the component via the DIGITAL OUT OPTICAL or COAXIAL connector using an optical or coaxial digital connectiong cord (not supplied). When the component with a built-in Dolby Digital decoder is connected, the player plays DVDs with sound recorded in Dolby Digital (AC-3) format while producing the effect of being in a movie theater or a concert hall.
In the setup display, set "DIGITAL OUT" in "INITIAL SETUP 2" to "DOLBY DIGITAL/PCM." (page 37)

■When using an optical digital connectiong cord

Optical digital connectiong cord

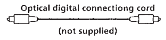

(not supplied)

Take off the cap and plug in the optical digital connectiong cord.

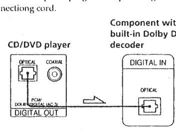

■When using a coaxial digital connectiong cord

Coaxial digital connectiong cord

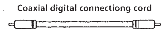

(not supplied)

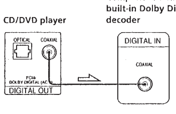

Note
Refer to the instructions supplied with the component to be connected.

Necessary Setup Before Using the Player

Some setups are necessary for the player depending on the TV or other components to be connected.
For details on using the setup display, see page 34.
For details on each setup display item, see pages 35 to 37.

■If the color system of the TV is PAL or DUAL
Since the color system of the unit is set to PAL, you can use the unit as it is.

■If the color system of the TV is NTSC
To set the TV to NTSC, turn on the unit while pressing the ⏸ button of the unit. To reset to PAL, turn off the unit and then turn on as described above.

■To connect the player to a wide-screen TV
In the setup display, set "TV TYPE" in "INITIAL SETUP 1" to "16:9." This is default setting.

■To connect the player to a normal TV
In the setup display, set "TV TYPE" in "INITIAL SETUP 1" to "4:3 LETTER BOX" or "4:3 PAN SCAN." For details, see page 36.

■To listen to the sound through speakers connected to an amplifier with a digital connector or to output the sound to a digital component such as a DAT or MD deck
When you play a DVD, set "DIGITAL OUT" in "INITIAL SETUP 2" to "PCM" in the setup display. This is default setting.

■To connect the player to a digital component with a built-in Dolby Digital decoder
In the setup display, set "DIGITAL OUT" in "INITIAL SETUP 2" to "DOLBY DIGITAL/PCM."

Use the setup display to change the various settings for the picture and sound.
For details, see page 34.

Selecting the Language for On-screen Display

You can select the language for the setup display or the messages displayed on the screen. Default setting is "ENGLISH."

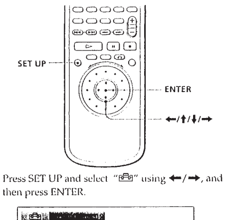

1 Press SET UP and select "▣" using ←/→, and then press ENTER.

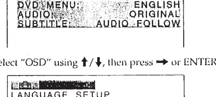

2 Select "OSD" using ↑/↓, then press → or ENTER.

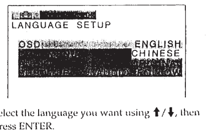

3 Select the language you want using ↑/↓, then press ENTER.

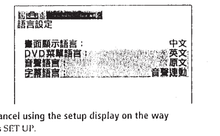

To cancel using the setup display on the way
Press SET UP.

Note
The languages you can select are the ones displayed in step 2. For details, see page 35.

Playing a DVD

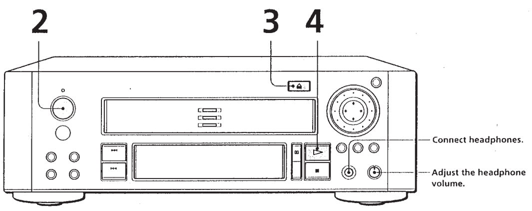

- **The operating procedure of CDs or VIDEO CDs is different from that of DVDs.**
  For details, see pages 14 to 17.

You can turn on the player using the remote
Press POWER when the indicator above the POWER button on the front panel is lit in red.

After following Step 4
A DVD menu or title menu may appear on the TV screen (see page 13).

Notes
- If you use an FM/AM tuner by the player, turn off the player.
- If you leave the player or the remote in pause mode for 15 minutes, the screen saver image appears automatically. To disappear the screen saver, press ▷. (If you want to set the screen saver function to off, see page 36.)
- If you don't operate the player or the remote for more than 30 minutes when a disc is not being played, the power is automatically turned off (Auto Power Off function.)

1 **Make settings on your TV.**
Turn on the TV and select the video input so that you can view the pictures from this player.

When using an amplifier
Turn on the amplifier and select the appropriate position so that you can listen to the sound from this player.

2 Press POWER to turn on the player.
The indicator (red) above the POWER button changes to green and the front panel display lights up.

3 Press ≜, and place the disc on the disc tray.

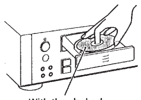
With the playback side facing down

4 Press ▷.
The disc tray closes, and the player starts playback (Continuous Play). Adjust the volume on the TV or the amplifier.

Depending on the DVD, some operations may be different or restricted. Refer to the instructions supplied with your disc.

When "RESUME" appears on the front panel display
You can resume playback from the point where you stopped the DVD (page 26). To play from the beginning of the disc, see page 26.

Note
You may not be able to do Resume Play depending on the DVD.

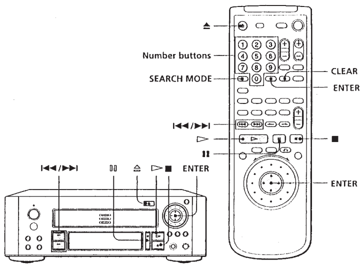

What are chapter and title?
See page 5.

Notes
Depending on the DVD, you may not be able to do some of the operations described on the right.

Each time you press SEARCH MODE
"CHAPTER SEARCH," "TITLE SEARCH" and "TIME SEARCH" appear on the TV screen.

To	Press
Stop	■
Pause	II
Resume play after pause	II or ▷
Go to the next chapter in Continuous Play mode	⏭
Go back to the preceding chapter in Continuous Play mode	⏮
Select the chapter	1 SEARCH MODE repeatedly until "CHAPTER SEARCH" appears on the TV screen. 2 Number buttons to select the chapter number, then ENTER or ▷.
Select the title	1 SEARCH MODE repeatedly until "TITLE SEARCH" appears on the TV screen. 2 Number buttons to select the title number, then ENTER or ▷.
Locate a point using the time code	1 SEARCH MODE repeatedly until "TIME SEARCH" appears on the TV screen. 2 Number buttons to enter a time code, then ENTER or ▷.
Stop play and remove the disc	≜

If you have made a mistake when you press the number button
Press CLEAR, then the correct number button.

DVD Basic Operations

To play at various speeds/frame-by-frame

Using the click shuttle and the JOG button/indicator, you can playback a DVD with various speed or frame-by-frame. Each time you press JOG, it changes between shuttle mode and jog mode.

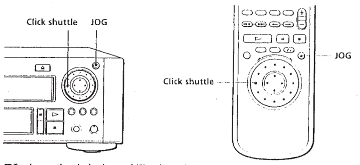

■ To change the playback speed (Shuttle mode)
Turn the click shuttle. The playback speed changes depending on the turning direction and angle as follows:

FF2►► (about 30 times the normal speed)
⇕
FF1►► (about 10 times the normal speed)
⇕
×2► (about twice the normal speed)
⇕
PLAY► (Normal speed)
⇕
SLOW1I► (playback direction)
⇕
SLOW2I► (playback direction – slower than "SLOW1I►")
⇕
PAUSE II
⇕
SLOW2 ◄I(opposite direction – slower than "SLOW1◄I")
⇕
SLOW1◄I (opposite direction)
⇕
×2◄ (about twice the normal speed : opposite direction)
⇕
FR1◄◄ (about 10 times the normal speed)
⇕
FR2◄◄ (about 30 times the normal speed)

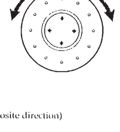

If you turn the click shuttle quickly, the playback speed goes to FF2/FR2 at once.

■ To play the DVDs frame-by-frame changing the playback speed (Jog mode)

1. Press JOG.
   The JOG button lights up during jog mode. When you press JOG, the playback is paused.
2. Turn the click shuttle.

Depending on the turning speed, the playback goes to frame-by-frame toward the turning direction of the click shuttle. If you turn the click shuttle with constant speed for a while, the playback speed goes to slow or normal.

To return to Continuous Play
Press ▷.

Notes
- Depending on the DVD, you may not be able to do some of the operations described on the right.
- When you play back a DVD at twice the normal speed in either direction, the sounds of the picture will come out from the LINE OUT (AUDIO 1, 2) connectors. The sounds are lower than the ones at normal speed. In this case, no sounds come out from the DIGITAL OUT OPTICAL and COAXIAL connectors.

Notes
- The JOG indicator shows the mode of the click shuttle close to the indicator only. When the indicator on the remote does not light up, it keeps shuttle mode on the remote even if the indicator on the player lights up.
- If you don't operate the click shuttle for about 20 seconds after pressing JOG, it returns to shuttle mode on the remote. On the player, it keeps jog mode.

Notes
- Depending on the DVD, you may not be able to select the title.
- Depending on the DVD, a "title menu" may simply be called a "menu" or "title " in the instructions supplied with the disc. "Press ENTER." may also be expressed as "Press SELECT."

Using the Title Menu

A DVD is divided into long sections of a picture or a music piece called "titles." When you play the DVD which contains several titles, you can select the title you want using the title menu.

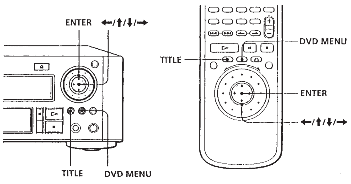

1 Press TITLE.
The title menu appears on the TV screen. The contents of the menu varies from disc to disc.

2 Press ←/↑/↓/→ to select the title you want to play.
Depending on the disc, you can use the number buttons to select the title.

3 Press ENTER.
The player starts playing the selected title.

If you want to select the language for the DVD menu
Change the setting using "LANGUAGE SETUP" in the setup display (see page 35).

Note
Depending on the DVD, a "DVD menu" may simply be called a "menu" in the instructions supplied with the disc.

Using the DVD menu

Some DVDs allow you to select the disc contents using the menu. When you play these DVDs, you can select the language for the sub-titles, the language for the sound, etc., using the DVD menu.

1 Press DVD MENU.
The DVD menu appears on the TV screen. The contents of the menu vary from disc to disc.

2 Press ←/↑/↓/→ to select the item you want to change.
Depending on the disc, you can use the number buttons to select the item.

3 To change other items, repeat Step 2.

4 Press ENTER.

DVD Basic Operations

Playing a CD/VIDEO CD

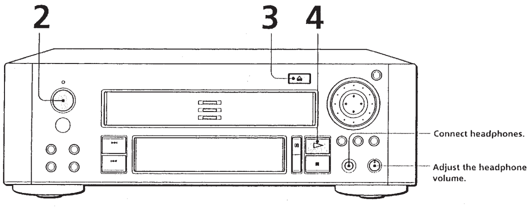

- The operating procedure of DVDs is different from that of CDs or VIDEO CDs.
  For details, see pages 10 to 13.

You can turn on the player using the remote
Press POWER when the indicator above the POWER button on the front panel is lit in red.

After following Step 4
The menu screen may appear on the TV screen depending on the VIDEO CD. You can play the disc interactively, following the instructions on the menu screen. (PBC Playback, see page 17.)

Notes
- If you use an FM/AM tuner by the player, turn off the player.
- If you leave the player or the remote in pause mode for 15 minutes, the screen saver image appears automatically. To disappear the screen saver, press ▷. (If you want to set the screen saver function to off, see page 36.)
- If you don't operate the player or the remote for more than 30 minutes when a disc is not being played, the power is automatically turned off (Auto Power Off function.)

1 **Make settings on your TV.**
Turn on the TV and select the video input so that you can view the pictures from this player.

When using an amplifier
Turn on the amplifier and select the appropriate position so that you can listen to the sound from this player.

2 Press POWER to turn on the player.
The indicator (red) above the POWER button changes to green and the front panel display lights up.

3 Press ≙, and place the disc on the disc tray.

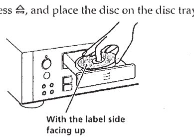
With the label side facing up

4 Press ▷.
The disc tray closes and the player starts playback (Continuous Play). Adjust the volume on the TV or the amplifier.

Depending on the VIDEO CD, some operations may be different or restricted. Refer to the instructions supplied with your disc.

When "RESUME" appears on the front panel display
You can resume playback from the point where you stopped the CD/VIDEO CD (page 26).
To play from the beginning of the disc, see page 26.

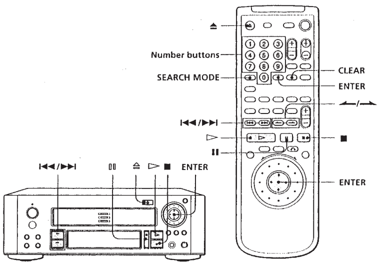

What is a track?
See page 5.

What is an index?
See page 5.

What is a scene?
See page 5.

If you want to change the search mode
Press SEARCH MODE. Each time you press in case of a VIDEO CD, "SCENE SEARCH," "TRACK SEARCH" and "V. INDEX SEARCH" appear on the TV screen. In case of a CD, only "TRACK SEARCH" appears.

Note
Some discs do not allow you to start playing from a particular scene. In this case, if you do Scene Search before you start playing, the player starts playing from scene 1. If you do Scene Search while playing a disc, the player starts playing from the current scene.

To	Press
Stop	■
Pause	II
Resume play after pause	II or ▷
Go to the next track in Continuous Play mode	▶▶|
Go back to the preceding track in Continuous Play mode	|◀◀
Go to the next index	⟶
Go back to the preceding index	⟵
Select the track	1 SEARCH MODE repeatedly until "TRACK SEARCH" appears on the TV screen. 2 Number buttons to select the track number, then ENTER or ▷.
Select the scene before you start playing a VIDEO CD with PBC functions and during PBC playback (Scene Search)	1 SEARCH MODE repeatedly until "SCENE SEARCH" appears on the TV screen. 2 Number buttons to select the scene number, then ENTER or ▷. (To check the current scene number, press DISPLAY. The scene number appears at the left top of the TV screen.)
Stop play and remove the disc	≜

If you have made a mistake when you press the number button
Press CLEAR, then the correct number button.

VIDEO CD
CD
Basic Operations

To play at various speeds / frame-by-frame

Using the click shuttle and the JOG button/indicator, you can playback a CD/VIDEO CD with various speed or frame-by-frame. Each time you press JOG, it changes between shuttle mode and jog mode.

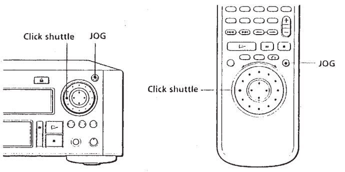

Notes
- Depending on the VIDEO CD, you may not do some of the operations described on the right.
- When you play a VIDEO CD, there is no sound except for the playback at normal speed.

■ To change the playback speed (Shuttle mode)
Turn the click shuttle. The playback speed changes depending on the turning direction and angle as follows:

FF2▶▶ (Faster than "FF1▶▶")
⬍
FF1▶▶
⬍
×2▶ (about twice the normal speed)
⬍
PLAY▶ (Normal speed)
⬍
SLOW1▮▶ (playback direction)
– VIDEO CD Only –
⬍
SLOW2▮▶ (playback direction
– Slower than "SLOW1▮▶")
– VIDEO CD Only –
⬍
PAUSE II
⬍
FR1◀◀
⬍
FR2◀◀ (Faster than "FR1◀◀")

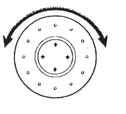

If you turn the click shuttle quickly, the playback speed goes to FF2/FR2 at once.

■ To play the VIDEO CDs frame-by-frame changing the playback speed (Jog mode – VIDEO CD Only)

1. Press JOG.
   The JOG button lights up during jog mode. When you press JOG, the playback is paused.
2. Turn the click shuttle.

Depending on the turning speed, the playback goes to frame-by-frame toward the playback direction only. If you turn the click shuttle with constant speed for a while, the playback speed goes to slow or normal.

To return to Continuous Play
Press ▷.

Notes
- The JOG indicator shows the mode of the click shuttle close to the indicator only. When the indicator on the remote does not light up, it keeps shuttle mode on the remote even if the indicator on the player lights up.
- If you don't operate the click shuttle for about 20 seconds after pressing JOG, it returns to shuttle mode on the remote. On the player, it keeps jog mode.

When playing VIDEO CDs with PBC functions
PBC playback starts automatically.

To cancel PBC playback of a VIDEO CD with PBC functions and play the disc in Continuous Play mode
There are two ways.
- Before you start playing, select the track you want using |◀◀ or ▶▶|, then press ENTER or ▷.
- Before you start playing, select the track number using the number buttons on the remote, then press ENTER or ▷.

"Play without PBC" appears on the TV screen and the player starts Continuous Play. You cannot play still pictures such as a menu screen.
To return to PBC playback, press ■ twice then press ▷.

Note
Depending on the VIDEO CD, "Press ENTER" in Step 3 may be expressed as "Press SELECT" in the instructions supplied with the disc.

Playing VIDEO CDs with PBC Functions (PBC Playback – VIDEO CD Only)

When playing VIDEO CDs with PBC functions (Ver. 2.0 discs), you can enjoy simple interactive operations, operations with search functions, etc.
PBC Playback allows you to play VIDEO CDs interactively, following the menu screen on the TV screen.
On this player, you can use the number buttons, ENTER or ▷/SELECT, |◀◀, ▶▶|, ⬆/⬇ and ↶ (RETURN) during PBC Playback.

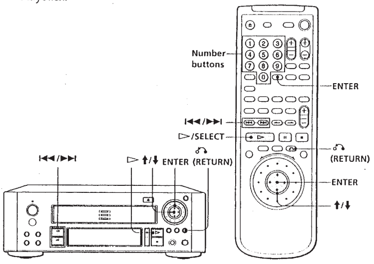

1 Start playing a VIDEO CD with PBC functions, following Steps 1 to 4 in "Playing a CD/VIDEO CD" on page 14.

2 Select the item number you want.

On the player
Press ⬆/⬇ to select the item number.

On the remote
Press the number button of the item you want.

3 Press ENTER or ▷/SELECT.

4 Follow the instructions on the menu screen for interactive operations.
Refer to the instructions supplied with the disc, as the operating procedure may differ according to the VIDEO CD.

Going back to the menu screen

Press ↶, |◀◀, or ▶▶|.

VIDEO CD
CD
Basic Operations

Using the On-Screen Display

DVD VIDEO CD CD

You can check the operating status of the player and the information about the disc using the on-screen display on the TV screen.

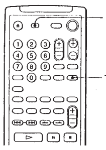

When playing back or stopping a DVD

DVD

Press DISPLAY.

Each time you press the DISPLAY button, the on-screen display changes as follows:

On-screen display 1
↓
On-screen display 2
↓
On-screen display 3
↓
On-screen display off

■ Display information of the on-screen display 1 mode

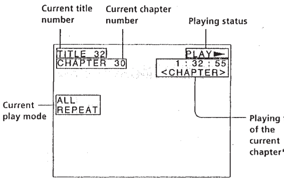

■ Display information of the on-screen display 2 mode

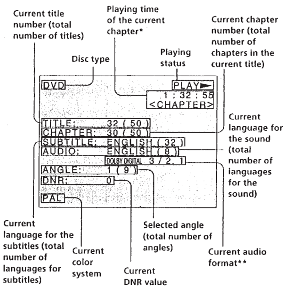

Note
Some information may not be displayed depending on a DVD.

* In display 1 or 2 mode, each time you press TIME the information changes as shown below.

Playing time of the current chapter
↓
Remaining time of the current chapter
↓
Playing time of the current title
↓
Remaining time of the current title

** "PCM", "MPEG" or "DOLBY DIGITAL" is displayed. In "DOLBY DIGITAL" case, the channels in the playing track are displayed by number as follows.

The case of Dolby Digital (AC-3) 5.1 ch:

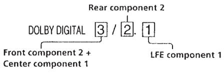

■ Display information of the on-screen display 3 mode

While playing a disc, the approximate bit rate of the playback picture is always displayed by Mbps (Mega bit per second).

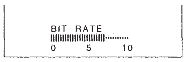

Bit rate of the playback picture

What is bit rate?
Bit rate refers to the amount of video data per second in a disc. The higher the bit rate is, the larger the amount of data. However, this does not always mean that you can get higher quality pictures.

■ Display information of the on-screen display off mode

No information is displayed. (Messages, etc., will be displayed.)

When playing back or stopping a CD/VIDEO CD

VIDEO CD CD

Press DISPLAY.

Each time you press the button, the on-screen display changes as follows:

On-screen display 1
↓
On-screen display 2
↓
On-screen display off

■ Display information of the on-screen display 1 mode

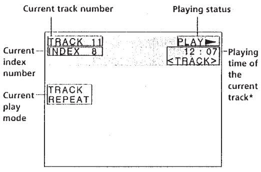

• During PBC playback (VIDEO CD Only)

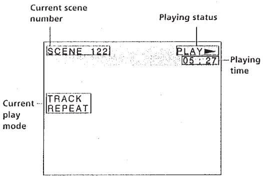

■ Display information of the on-screen display 2 mode

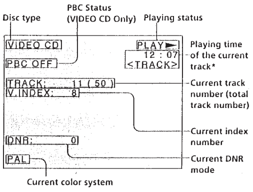

• During PBC playback (VIDEO CD Only)

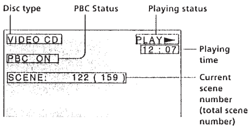

* In display 1 or 2 mode, each time you press TIME, the information changes as shown below.

Playing time of the current track
↓
Remaining time of the current track
↓
Playing time of the disc
↓
Remaining time of the disc

While you are doing Shuffle Play, Program Play, or PBC Playback, the playing time of the disc and the remaining time of the disc are not displayed.

■ Display information of the on-screen display off mode

No information is displayed. (Messages, etc., will be displayed.)

Using the Front Panel Display

DVD VIDEO CD CD

You can check information about the disc, such as the total number of the titles or the tracks or remaining time, using the front panel display.

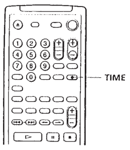

When playing back a DVD

DVD

■ Display information while playing the disc

The DVD indicator on the disc tray lights up.

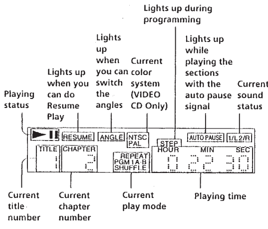

■ Checking the remaining time

Press TIME.

Each time you press TIME while playing the disc, the display changes as shown in the chart to the right. The time information in the on-screen display (1 and 2) also changes each time you press TIME.

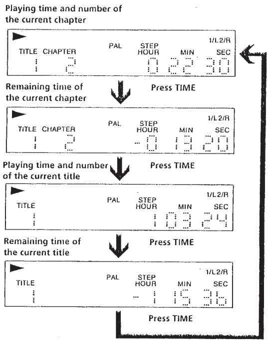

Notes
• Depending on the DVD, the chapter number or time may not appear.
• While you are doing Shuffle Play or Program Play, the playing time of the disc and the remaining time of the disc are not displayed.

When playing back a CD/VIDEO CD

VIDEO CD CD

■ Display information while playing a disc

The CD indicator for the CD or the VIDEO CD indicator for the VIDEO CD lights up.

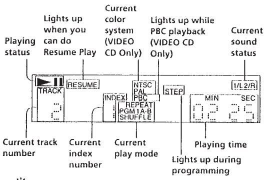

When playing VIDEO CDs with PBC functions
The current scene number is displayed instead of the current track number and the current index number. In this case, the front panel display does not change when you press TIME.

■ Checking the remaining time

Press TIME.

Each time you press TIME while playing a disc, the display changes as shown in the chart below. The time information in the on-screen display (1 and 2) also changes each time you press TIME.

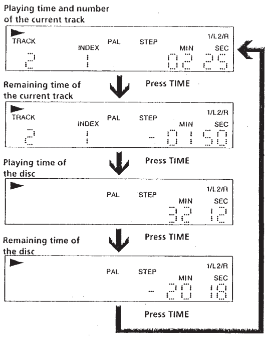

Note
While you are doing Shuffle Play, Program Play or PBC playback, the playing time of the disc and the remaining time of the disc are not displayed.

Playing Repeatedly (Repeat Play)

You can play all the titles/tracks on a disc, a single title/chapter/track or a specific portion repeatedly.

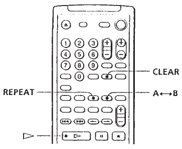

Repeating all the titles or all the tracks on a disc DVD VIDEO CD CD

In Shuffle or Program Play mode, the player repeats the titles or tracks in the shuffled or programmed order.
You cannot do Repeat Play during PBC playback of VIDEO CDs (page 17). You may not be able to do Repeat Play depending on the DVD.

Press REPEAT during playback.
"ALL REPEAT" appears on the screen and "REPEAT" appeares on the front panel display. The player repeats the titles/chapters/tracks as follows:

When the disc is played in	The player repeats
Continuous Play (page 10, 14)	All the titles/all the tracks
Shuffle Play (page 24)	All the titles or tracks in random order
Program Play (page 24)	Programmed titles/chapters/tracks

To cancel repeating all the titles or all the tracks on a disc
Press CLEAR.

Repeating the current title or chapter DVD

You can repeat only the current title or chapter in Continuous Play mode. You may not be able to do Repeat Play depending on the DVD.

■ Repeating the current title
While the title you want is being played, press REPEAT repeatedly until "TITLE REPEAT" appears on the TV screen.
The player repeats the current title.

■ Repeating the current chapter
While the chapter you want is being played, press REPEAT repeatedly until "CHAPTER REPEAT" appears on the TV screen.
The player repeats the current chapter.
"REPEAT 1" appears on the front panel display.

"CHAPTER" is displayed when you select the current chapter

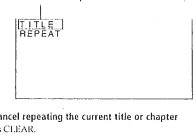

To cancel repeating the current title or chapter
Press CLEAR.

Repeating the current track VIDEO CD CD

You can repeat only the current track in Continuous Play mode.

While the track you want is being played, press REPEAT until "TRACK REPEAT" appears on the TV screen.
"REPEAT 1" appears on the front panel display and the player repeats the current track.

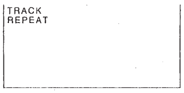

To cancel repeating the current track
Press CLEAR.

Note
Repeat play is canceled when you turn the power off.

Repeating a specific portion (A←→B Repeat) DVD VIDEO CD CD

You can play a specific portion of a title, chapter, track repeatedly. This is useful when you want to memorize lyrics.
During PBC Playback of VIDEO CDs (page 17), this function is available only while playing moving pictures.
You may not be able to do Repeat Play depending on the DVD.

1 During playback, when you find the starting point (point A) of the portion to be played repeatedly, press A←→B.
The starting point (point A) is set. "A-B REPEAT" appears on the TV screen and "B" flashes.

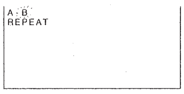

"REPEAT A-" also appears on the front panel display and "B" flashes.

2 When you reach the ending point (point B), press A←→B again.
"A-B REPEAT" on the TV screen disappears and the player starts repeating this specific portion.

"REPEAT A-B" appears on the front panel display during A←→B repeat play.

To cancel A←→B Repeat
Press CLEAR.

To cancel setting halfway
Press CLEAR.

Notes
- A←→B Repeat is canceled when:
  - you open or close the disc tray
  - you turn the power off
- When you set A←→B Repeat, the settings for Shuffle Play and Program Play are canceled.
- You may not be able to set A←→B Repeat, depending on the scene of a DVD or a VIDEO CD.

Playing in Random Order (Shuffle Play) DVD VIDEO CD CD

You can have the player "shuffle" titles or tracks and play them in a random order.

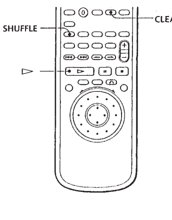

1 Press SHUFFLE.

2 Press ▷.
(During playback, the player starts Shuffle Play when you follow the step 1.)

To cancel Shuffle Play
Press CLEAR

Notes
- The Shuffle Play is canceled when:
  - you open or close the disc tray
  - you turn the power off
- You may not be able to do Shuffle Play depending on the DVD.
- When you play a DVD, you can do Shuffle Play only by titles.

Creating Your Own Program (Program Play) DVD VIDEO CD CD

You can arrange the order of the titles, chapters or tracks on the disc and create your own program. The program can contain up to 99 titles, chapters and tracks.

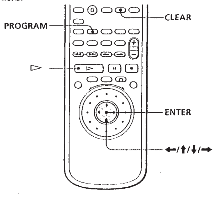

1 Press PROGRAM.
The programming display appears.

"TRACK__" is displayed when you play a VIDEO CD or a CD.

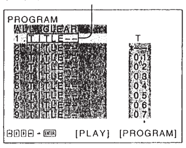

2 Press →.
"01" is highlighted.

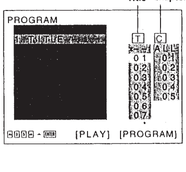

3 Select the title, chapter or track you want to program using ↑/↓, then press ENTER.
For example, select title or track 2.
(You can also use the number buttons and ENTER button to select. In this case, the selected number is displayed on the screen.)

■ When playing a DVD
When both titles and chapters are recorded on the disc, select the title, then the chapter.

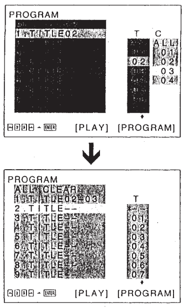

■ When playing a VIDEO CD or CD
Select the track you want to program.

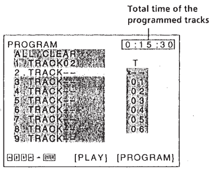

4 To program other titles, chapters or tracks, repeat Step 3.
The programmed titles, chapters or tracks are displayed from 02 in order.

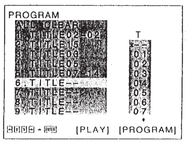

5 Press ▷ to start Program Play.

To cancel Program Play
Press CLEAR.

To cancel programming
Press PROGRAM.

To change programming
1 In Step 2, select the program number of the title, chapter or track you want to change using ↑/↓.
2 Follow Step 3 for new programming.

To cancel the programmed order
To cancel all the titles, chapters or tracks in the programmed order, select "ALL CLEAR" in Step 2.
To cancel the selected program, select the program using ↑/↓ in Step 2 then press CLEAR, or select "--" in Step 3 and then press ENTER.

The program remains even after the Program Play ends
When you press ▷, you can play the same program again.

You can do Repeat Play or Shuffle Play of the programmed titles, chapters or tracks
During Program Play, press REPEAT or SHUFFLE.

Notes
- The number of titles, chapters or tracks displayed are that of the titles, chapters or tracks recorded on a disc.
- The program is canceled when:
  - you open or close the disc tray
  - you turn the power off
- You may not be able to do Program Play depending on the DVD.
- While you are doing PBC playback, you cannot set a program unless you stop playback once.

Resuming Playback from the Point Where You Stopped a Disc (Resume Play)

DVD VIDEO CD CD

The player stores the point where you stopped a disc if "RESUME" appears on the front panel display. In this case, you can resume playback from that point.
As long as you do not open the disc tray, Resume Play is available even if you turn the power off.

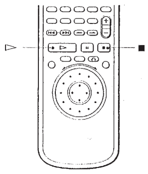

1 While playing a disc, press ■ to stop playback.
"RESUME" appears in the front panel display and "When playing next time, disc restarts from point you stopped." appears on the TV screen.
If "RESUME" does not appear, Resume Play is not available.

2 Press ▷.
The player starts playback from the point you stopped the disc in Step 1.

To play from the beginning of the disc
When "RESUME" appears on the front panel display before you start playing, press ■ to turn off "RESUME," then press ▷.

Notes
- You may not do Resume Play depending on the DVD.
- Resume Play is not available in Shuffle or Program Play mode.
- Depending on where you stopped the disc, the player may resume playback from a different point.
- The point where you stopped playing is cleared when:
  - you open or close the disc tray
  - you disconnect the AC power cord
  - you change the play mode
  - you start playback after selecting a title, chapter or track
  - you change the settings of "DVD MENU", "AUDIO" or "SUBTITLE" in "LANGUAGE SETUP" in the setup display
  - you change the settings of "TV TYPE", "PARENTAL CONTROL" in "INITIAL SETUP 1" in the setup display

Reducing the Picture Noise (DNR: Digital Video Noise Reduction)

DVD VIDEO CD

You can make the picture clearer by reducing the picture noise.

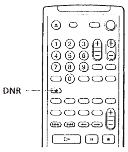

Press DNR.
Each time you press the button, the value for DNR changes as follows:

0 → 1 → 2 → 3 (→ 0)

* 0 means DNR is off.

As the value increases, the picture noise will be reduced. However, afterimages may increase.

Note
Depending on the disc, the effect may be difficult to tell.

Playing Discs in Various Modes

Changing the Sounds

DVD VIDEO CD CD

With DVDs on which multilingual sounds are recorded, you can select the language you want while playing the DVD.
With multiplex VIDEO CDs, you can select the sound from the right or left channel and listen to the sound of the selected channel through both the right and left speakers. In this case, the sound loses the stereo effect.

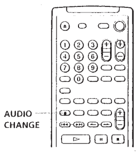

Press AUDIO CHANGE while playing a disc.
Each time you press the button, the indication and the language/sound from the speakers change as follows:

■When playing a DVD

AUDIO 1 → AUDIO 2 → ..... (→ AUDIO 1)

```
AUDIO
3:PORTUGUESE
```

■When playing a VIDEO CD or a CD

1/L : The sound of the left channel
↓
2/R : The sound of the right channel
↓
Stereo
(1/L 2/R): The standard stereo sound (→ 1/L)

Notes
- Depending on the DVD, you may not be able to change the languages even if multilingual sounds are recorded on the DVD.
- While playing the CD/VIDEO CD, if you turn off the player the standard stereo playback will be resumed.
- If the language is indicated in a four-digit number, refer to the Language Code List on page 48.

Playing Discs in Various Modes

Displaying the Subtitles

DVD

With DVDs on which subtitles are recorded, you can turn the subtitles on and off whenever you want while playing the DVD. With DVDs on which multilingual subtitles are recorded, you can change the subtitles whenever you want while playing the DVD.

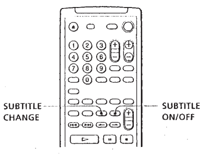

Turning the Subtitles On and Off

Press SUBTITLE ON/OFF while playing a DVD.
Subtitles appear on the TV screen.

To turn off the subtitles
Press SUBTITLE ON/OFF again.

Notes
- When playing the DVD on which no subtitles are recorded, no subtitles appear even if you press SUBTITLE ON/OFF.
- Depending on the DVD, you may not be able to turn the subtitles on even if they are recorded on the DVD.
- Depending on the DVD, you may not be able to turn the subtitles off.
- If the language is indicated in a four-digit number, refer to the Language Code List on page 48.

Changing the Subtitle Language

When subtitles are turned off, press SUBTITLE ON/OFF to turn on the subtitles.

While playing a DVD, press SUBTITLE CHANGE repeatedly until the subtitles you want appear on the TV screen.

SUBTITLE 1 → SUBTITLE 2 → ... (→ SUBTITLE 1)

```
SUBTITLE
1:ENGLISH
```

Notes
- The type and number of languages for subtitles vary from disc to disc.
- Depending on the DVD, you may not be able to change the subtitles even if multilingual subtitles are recorded on the DVD.

Playing Discs in Various Modes

Changing the Angles

DVD

With DVDs on which various angles (multi-angles) for a scene are recorded, you can change the angles whenever you want while playing the DVD.

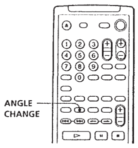

When "ANGLE" appears on the front panel display while playing a DVD, press ANGLE CHANGE repeatedly until you get the angle you want.

```
►        ANGLE
```

ANGLE 1 → ANGLE 2 → ... (→ ANGLE 1)

```
ANGLE
1
```

You can specify the angle beforehand
Specify the angle when "ANGLE" is not displayed on the front panel display. When a scene on which multi-angles are recorded comes, the angle is automatically selected.

Notes
- The number of angles varies from disc to disc or from scene to scene. The number of angles that can be changed on a scene is that of angles recorded for that scene.
- Depending on the DVD, you may not be able to change the angles even if multi-angles are recorded on the DVD.

Limiting Playback by Children (Parental Control)

DVD

Playing some DVDs can be limited depending on the age of users. The "Parental Control" function allows you to set a playback limitation level.

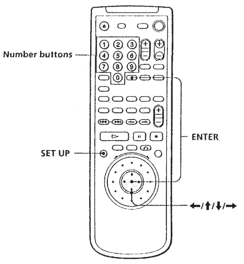

1 Press SET UP to display the setup display on the TV screen before playing.

```
INITIAL SETUP 1
TV TYPE:            16:9
COLOR SYSTEM:       AUTO
AUTO PLAY:           OFF
DIMMER:           BRIGHT
BACKGROUND:         BLUE
SCREEN SAVER:         ON
PARENTAL CONTROL
                 QUIT
```

(Continued)

2 Select "INITIAL SETUP 1" using ←/→, then press ENTER or ↓.

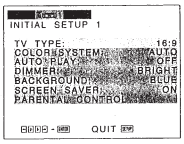

3 Select "PARENTAL CONTROL" using ↑/↓, then press ENTER.

■ When you have not entered a password yet
The display for entering a password appears.

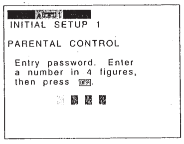

■ When you have already entered a password
The display for confirming the password appears.
Skip Step 4.

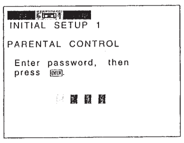

4 Enter a password in 4 figures using the number buttons, then press ENTER.
The figures change to asterisks (✱), and the display for confirming the password appears.

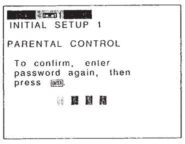

5 To confirm your password, enter it using the number buttons, then press ENTER.
The display for setting the playback limitation level and changing the password appears.

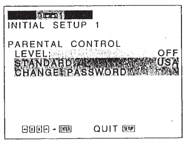

6 Select "STANDARD" using ↑/↓, then press →.

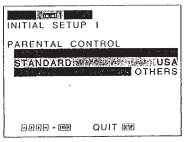

7 Select an area as the standard for playback limitation level using ↑/↓, then press →.
When you select "OTHERS", select and enter the standard code in the table below using number buttons.

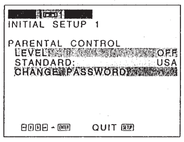

8 Select "LEVEL" using ↑/↓, then press →.

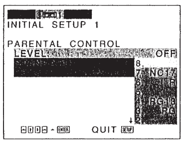

9 Select the level you want using ↑/↓, then press ENTER.

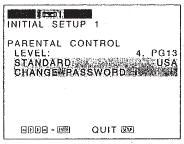

The lower the value is, the more strict the limitation.

To return to the normal screen
Press SET UP.

To turn off the Parental Control function and play the DVD after entering your password
Set "LEVEL" to "OFF" in Step 9, then press ▷.

To change the password
1 In Step 5, select "CHANGE PASSWORD" using ↑/↓, then press → or ENTER.
The display for changing the password appears.
2 Follow Steps 4 and 5 to enter a new password.

If you have forgot your password
Enter six digits number "199703" in Step 4 to clear the current password. To enter a new password, follow the procedure from Step 4 again.

Notes
- When you play DVDs which do not have the Parental Control function, playback cannot be limited on this player.
- When you do not set a password, you cannot change the settings for playback limitation.
- Depending on the DVD, you may be asked to change the parental control level while playing the disc. In this case, enter the password, then change the level.
When you stop playing the DVD, the level returns to the original level.

Standard	Code number
Austria	2046
Belgium	2057
Canada	2079
China	2092
Denmark	2115
Finland	2165
France	2174
Germany	2109
Hong Kong	2219
Indonesia	2238
Italy	2254
Japan	2276
Malaysia	2363
Netherlands	2376
Norway	2379
Philippines	2424
Singapore	2501
Spain	2149
Sweden	2499
Switzerland	2086
Taiwan	2543
Thailand	2528
United Kingdom	2184

Controlling the TV or the amplifier with the Supplied Remote

If you adjust the remote signal, you can control your TVs with the supplied remote. Default setting is to control Sony TVs with the mark.
When you connect the player to a Sony amplifier, you can also set the input of the amplifier to this player with the supplied remote.

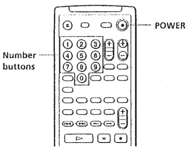

Controlling TVs with the remote

Hold down POWER, and enter your TV's manufacturer's code in the table below using the number buttons. Then release POWER.

Code numbers of controllable TVs
If more than one code number is listed, try entering them one at a time until you find the one that works with your TV.

Notes
- If you enter a new code number, the code number previously entered will be erased.
- When you replace the batteries of the remote commander, the code number automatically resets to 01 (Sony). Reset the appropriate code number.

Manufacturer	Code number	Manufacturer	Code number
Sony (default)	01	Sharp	29
Gold Star	03, 04	Aiwa	32
Philips	06, 08	JVC	33
Miver	09	Toshiba	38
Blaupunkt	10, 21	Siemens	39
Grundig	11	Thomson	43
Saba	12, 13	Loewe	45
Panasonic	17, 49	Orion	47, 48
Samsung	23	Ferguson	52
Hitachi	24	NEC	66
Sanyo	25	TEAC	67
Pioneer	26	Akai	68
Mitsubishi	27, 28, 50	Nokia	69

You can control your TV using the buttons below.

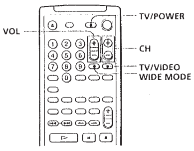

By pressing	You can
TV POWER	Turn on or off the TV
TV/VIDEO	Select the input source for the TV
WIDE MODE	Swiches the wide mode of the TV
VOL	Adjust the volume of the TV
CH	Change the channel of the TV

Note
Depending on the TV, you may not be able to control your TV or to use some buttons above.

Controlling Sony AV amplifier with the remote

Hold down POWER, and enter your AV amplifier's input connector code in the table below using the number buttons.* Then release POWER.

Amplifier connector	Code number
VIDEO 1	91
VIDEO 2	92
VIDEO 3	93
AUX 1	94
LD/DVD (default setting)	95
AC-3	96
TV	97

* If you connect the player to the SONY Mini Hi-Fi Component System, enter "98".

When you press AV CENTER on the supplied remote, you can set the input of AV amplifier to the player.**
You can also change the volume of the sound using AV VOL.

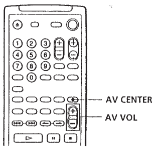

** If you connect the player to the SONY Mini Hi-Fi Component System, press AV CENTER repeatedly to change the input of the system.

Using the Setup display

Using the setup display, you can do the initial setup, adjusting the picture and sound quality, setting the various outputs, etc. You can also set a language for the sub-titles and the setup display, limit playback by children, etc.
For details on each setup display item, see pages 35 to 37.
The setup display items are listed in page 47.

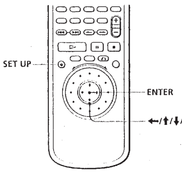

1 Press SET UP to display the setup display on the TV screen.

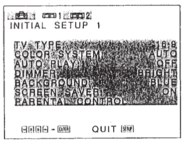

2 Select the main item you want using ←/→, and then press ENTER.
The selected main item is highlighted.

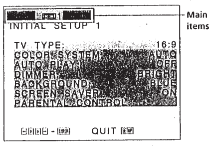

3 Select the item you want using ↑/↓, then press → or ENTER.

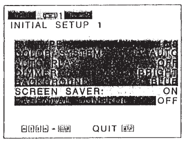

4 Select the setting you want using ↑/↓, then press ENTER.

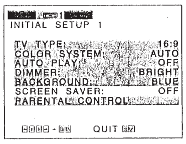

To cancel using the setup display on the way
Press SET UP.

Note
Some setup display items require operations other than selecting the setting. For details on these items, see the relevant pages.

Setting the Language for Display and Sound (LANGUAGE SETUP)

Select "" after pressing SET UP.
"LANGUAGE SETUP" allows you to set various languages for on-screen display or sound.
Default settings are underlined.

Note
When you select a language that is not recorded on the DVD, one of the recorded languages is automatically selected except for "OSD".

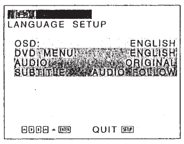

■ OSD (On-Screen Display)
Switches the language for the on-screen display.
- ENGLISH
- CHINESE

■ DVD MENU
Switches the language for the DVD menu.
- ENGLISH
- CHINESE
- SPANISH
- PORTUGUESE
- JAPANESE
- FRENCH
- GERMAN
- ITALIAN
- DUTCH
- OTHERS→
  When you select "OTHERS," select and enter the language code from the list using the number buttons (page 48).

■ AUDIO
Switches the language for the sounds.
- ORIGINAL : the language given the priority in the disc
- ENGLISH
- CHINESE
- SPANISH
- PORTUGUESE
- JAPANESE
- FRENCH
- GERMAN
- ITALIAN
- DUTCH
- OTHERS→
  When you select "OTHERS," select and enter the language code from the list using the number buttons (page 48).

■ SUBTITLE
Switches the language for the subtitles.
- AUDIO FOLLOW*
- ENGLISH
- CHINESE
- SPANISH
- PORTUGUESE
- JAPANESE
- FRENCH
- GERMAN
- ITALIAN
- DUTCH
- OTHERS→
  When you select "OTHERS," select and enter the language code from the list using the number buttons (page 48).

* When you select "AUDIO FOLLOW," the language for the subtitles change according to the language for the sound.

Settings for Display (INITIAL SETUP 1)

Select " 1" after pressing SET UP.
"INITIAL SETUP 1" allows you to set the display according to the playback conditions.
Default settings are underlined.

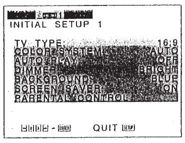

■ TV TYPE
Selects the aspect ratio of the TV to be connected.
- 16:9: when you connect a wide-screen TV to the player
- 4:3 LETTER BOX: when you connect a normal TV to the player. Displays the wide picture with bands displayed on the upper and lower portions of the screen.
- 4:3 PAN SCAN : when you connect a normal TV to the player. Displays the wide picture on the whole screen with a portion automatically cut off.

16:9

4:3 LETTER BOX

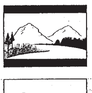

4:3 PAN SCAN

Note
Depending on the DVD, "4:3 LETTER BOX" may be selected automatically instead of "4:3 PAN SCAN" and vice versa.

■ COLOR SYSTEM
Selects the color system when you play a VIDEO CD.
- AUTO: Outputs the video signal in the system of the VIDEO CD, either PAL or NTSC. If your TV is the DUAL system, select AUTO.
- PAL: changes the video signal of an NTSC VIDEO CD and outputs it in PAL system.
- NTSC: changes the video signal of a PAL VIDEO CD and outputs it in NTSC system.

Notes
- You cannot change the color system of the DVD itself.
- You can change the color system of this unit according to the connected TV. See page 9.

■ AUTO PLAY
Selects the setting of Auto Play when you connect the AC power cord to the AC outlet.
- OFF: does not start playing with TIMER, DEMO1 or DEMO2.
- TIMER: starts playing a disc automatically when you connect the AC power cord to the AC outlet. By connecting a timer (not supplied), you can start playing at any time you want.
- DEMO1: starts playing the demonstration 1 automatically.
- DEMO2: starts playing the demonstration 2 automatically.

■ DIMMER
Adjusts the lighting of the front panel display.
- BRIGHT: makes the front panel display bright.
- DARK: makes the front panel display dark.
- OFF: turns off the lighting of the front panel display.

■ BACKGROUND
Selects the background color of the TV screen in stop mode.
- BLUE: The background color is blue.
- BLACK: The background color is black.

■ SCREEN SAVER
Turns on and off the screen saver. If you turn on the screen saver, the screen saver image appears when you leave the player or the remote in pause mode for 15 minutes. The screen saver is useful to prevent your display from damage.
- ON: turns on the screen saver.
- OFF: turns off the screen saver.

■ PARENTAL CONTROL
Sets a password and playback limitation level when you play DVDs with playback limitation for children.
For details, see page 29.

Settings for Sound (INITIAL SETUP 2)

Select " 2" after pressing SET UP.
"INITIAL SETUP2" allows you to set the sound according to the playback conditions.
Default settings are underlined.

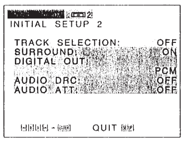

■ TRACK SELECTION
Gives the Dolby Digital (AC-3) format priority when you play a DVD on which multiple audio formats are recorded. If multiple audio channels are recorded in Dolby Digital (AC-3) format, the higher-numbered channel audio recorded in Dolby Digital (AC-3) format is played.
- OFF: No priority given.
- AUTO: Priority given.

Notes
- When you set this item to "ON", the language may change depending on the "AUDIO" settings in "LANGUAGE SETUP."
  The "TRACK SELECTION" setting has higher priority than that of "AUDIO" settings in "LANGUAGE SETUP" (page 35).
- Depending on the DVD, the audio with priority may be predetermined. In this case, you cannot give priority to the Dolby Digital (AC-3) format by selecting "AUTO."

■ SURROUND
Switches the mixing down methods when you play a DVD on which the sound in Dolby Digital (AC-3) format is recorded.
- ON: when the player is connected to an audio component that conforms to Dolby surround, Dolby Pro Logic surround, etc.
- OFF : when the player is connected to a normal audio component.

■ DIGITAL OUT
Switches the methods of outputting audio signals from the DIGITAL OUT OPTICAL and COAXIAL connectors on the rear panel of the player.
- PCM: when the player is connected to an audio component without a built-in Dolby Digital (AC-3) decoder. The Dolby Digital track is output also in 2 channels and the surround component depends on the "SURROUND" setting.
- DOLBY DIGITAL/PCM: when the player is connected to audio component with a built-in Dolby Digital (AC-3) decoder.

Note
Select the setting correctly. Otherwise, no sound or strange sound will come out from the speakers, affecting your ears or causing the speakers to be damaged.

■ AUDIO DRC (Dynamic Range Control)
Makes the sound clear with the volume turned down at night, etc. when you play a DVD. This affects the output from the DIGITAL OUT connectors only when "DIGITAL OUT" in "INITIAL SETUP 2" is set to "PCM," and the output from the LINE OUT (AUDIO 1,2).
- OFF: Normally select this position.
- ON: makes the sound clear even if you turned the volume down.

Note
When you play DVDs without the AUDIO DRC function, there may be no effect on the sound.

■ AUDIO ATT (attenuation)
Selects the setting of the output from the LINE OUT (AUDIO 1, 2) connectors according to audio equipment to be connected.
- OFF: turns off the audio attenuation.
- ON: reduces the audio output level so that no sound distortion occurs.

Note
The setting does not affect the output from the DIGITAL OUT connectors.

Precautions

On safety

- Caution – The use of optical instruments with this product will increase eye hazard.
- Should any solid object or liquid fall into the cabinet, unplug the player and have it checked by qualified personnel before operating it any further.

On power sources

- The player is not disconnected from the AC power source (mains) as long as it is connected to the wall outlet, even if the player itself has been turned off.
- If you are not going to use the player for a long time, be sure to disconnect the player from the wall outlet. To disconnect the AC power cord (mains lead), grasp the plug itself; never pull the cord.
- Should the AC power cord (mains lead) need to be changed, have it done at a qualified service shop only.

On placement

- Place the player in a location with adequate ventilation to prevent heat build-up in the player.
- Do not place the player on a soft surface such as a rug that might block the ventilation holes on the bottom.
- Do not place the player in a location near heat sources, or in a place subject to direct sunlight, excessive dust or mechanical shock.

On operation

- If the player is brought directly from a cold to a warm location, or is placed in a very damp room, moisture may condense on the lenses inside the player. Should this occur, the player may not operate properly. In this case, remove the disc and leave the player turned on for about half an hour until the moisture evaporates.

On adjusting volume

- Do not turn up the volume while listening to a portion with very low level inputs or no audio signals. If you do, the speakers may be damaged when a peak level portion is played.

On cleaning

- Clean the cabinet, panel and controls with a soft cloth slightly moistened with a mild detergent solution. Do not use any type of abrasive pad, scouring powder or solvent such as alcohol or benzine.

If you have any questions or problems concerning your player, please consult your nearest Sony dealer.

IMPORTANT NOTICE
Caution: The enclosed DVD Player is capable of holding a still video image or Setup display image on your television screen indefinitely. If you leave the still video image or Setup display image displayed on your TV for an extended period of time you risk permanent damage to your television screen. Projection televisions are very susceptible.

Notes on Discs

On handling discs

- To keep the disc clean, handle the disc by its edge. Do not touch the surface.
- Do not stick paper or tape on the disc.
  If there is glue (or a similar substance) on the disc, remove the glue completely before using the disc.

Not this way

- Do not expose the disc to direct sunlight or heat sources such as hot air ducts, or leave it in a car parked in direct sunlight as there can be considerable rise in temperature inside the car.
- After playing, store the disc in its case.

On cleaning

- Before playing, clean the disc with a cleaning cloth. Wipe the disc from the center out.

- Do not use solvents such as benzine, thinner, commercially available cleaners or anti-static spray intended for vinyl LPs.

Troubleshooting

If you experience any of the following difficulties while using the player, use this troubleshooting guide to help you remedy the problem. Should any problem persist, consult your nearest Sony dealer.

The power is not turned on.
→If the indicator above the POWER button is not lit, check that the AC power cord is connected securely.

There is no picture.
→Check that the player is connected securely.
→The video connecting cord is damaged. Replace it with a new one.
→Make sure you connect the player to the video input connector on the TV. (page 6)
→Make sure you turn on the TV.
→Make sure you select the video input on the TV so that you can view the pictures from the player.

There is no sound.
→Check that the player is connected securely.
→The audio connecting cord is damaged. Replace it with a new one.
→Make sure you connect the player to the audio input connectors on the amplifier. (page 6)
→Make sure you turn on the TV and the amplifier.
→Make sure you select the appropriate position on the amplifier so that you can listen to the sound from the player.
→The player is in pause mode or in Slow-motion Play mode. Press ▷ to return to normal play mode.
→Fast forward (FF1 or FF2) or fast reverse (FR1 or FR2) is performed. Press ▷ to return to normal play mode.

The remote does not function.
→Remove any obstacles between the remote and the player.
→Use the remote near the player.
→Point the remote at the remote sensor ⊠ on the player.
→Replace all the batteries in the remote with new ones if they are weak.

The picture noise appears.
→Clean the disc.
→If video from your DVD player has to go through your VCR to get to your TV, the copy-protection applied to some DVD programs could affect picture quality. If you still experience problems after checking your connections, please try connecting your DVD player directly to your TV's S-input, if your TV is equipped with that input.

The sound noise is heard.
→Clean the disc.

The sound distortion occurs.
→In the setup display, set "AUDIO ATT" in "INITIAL SETUP 2" to "ON."

The disc does not play.
→There is no disc inside ("INSERT DISC" appears on the TV screen).
Insert a disc.
→Insert the disc with the playback side facing down on the disc tray correctly.
→Place the disc on the disc tray correctly.
→Clean the disc.
→The player cannot play CD-ROMs, etc. (page 5)
Insert a DVD, a VIDEO CD, or CD.
→Check the region code of the DVD. (page 4)
→Moisture has condensed inside the player.
Remove the disc and leave the player turned on for about half an hour. (page 38)

The player does not play from the beginning when playing a disc.
→Repeat Play, Shuffle Play or Program Play has been selected. Press CLEAR. (page 22 to 25)
→Resume Play has been selected.
Press ■ on the front panel or on the remote before you start playing. (page 26)
→A title menu or a DVD menu automatically appears on the TV screen when you play your DVD, or a setup display automatically appears on the TV screen when you play your VIDEO CD with PBC functions.

The DVD does not play when you select a title.
→The Parental Control functions. (page 29)

The player starts playing the DVD automatically.
→The DVD features the auto playback function.
→In the setup display, set "AUTO PLAY" to "OFF" under "INITIAL SETUP 1." Otherwise the player starts playback automatically.

Stopping playback, Search, Slow-motion Play, Repeat Play, Shuffle Play or Program Play, etc., cannot be done.
→Depending on the disc, you may not do some of the operations above.

Messages do not appear on the TV screen in the language you want.
→In the setup display, select the language for the on-screen display in "OSD" under "LANGUAGE SETUP." (page 35)

The language for the sound cannot be changed when you play a DVD.
→Multilingual sound is not recorded on the DVD.
→Changing the language for the sound is prohibited on the DVD.

The language for the sound changes automatically.
→When you set the "TRACK SELECTION" in "INITIAL SETUP 2" to "ON" in the setup display, the language may change depending on the "AUDIO" settings in "LANGUAGE SETUP." The "TRACK SELECTION" setting has higher priority than that of "AUDIO" settings. (page 37)

The language for the subtitles cannot be changed when you play a DVD.
→Multilingual subtitles are not recorded on the DVD.
→Changing the language for the sub-titles is prohibited on the DVD.

The sub-titles cannot be turned off when you play a DVD.
→Depending on the DVD, you may not be able to turn the sub-titles off.

The angles cannot be changed when you play a DVD.
→Multi-angles are not recorded on the DVD.
→Change the angles when "ANGLE" appears on the front panel display. (page 29)
→Changing the angles is prohibited on the DVD.

The aspect ratio of the screen cannot be changed even though you set "TV TYPE" in "INITIAL SETUP 1" in the setup display when you play a wide picture.
→The aspect ratio is fixed on your DVD.

The menu screen does not appear when you play a VIDEO CD.
→The VIDEO CD does not feature PBC functions.
→Follow the correct operating procedure. (Also refer to the instructions supplied with the disc.)

The sound loses stereo effect when you play a VIDEO CD or a CD.
→"1/L" or "2/R" appears on the front panel display.
On the remote, press AUDIO CHANGE repeatedly until "1/L 2/R " appears. (page 27)
→Make sure you connect the player appropriately. (pages 7, 8)

The player does not operate properly.
→Static electricity, etc., may affect the player's operation.
Disconnect the AC power cord once, then connect it again.

The numbers or letters of 5 characters is displayed on the screen.
→Self diagnosis function was activated. See the table in page 41 and treat the player appropriately.

Self-diagnosis function

In the self-diagnosis function works to prevent the CD/DVD player from malfunctioning, a five-digit service number (combination of a letter and figures) flashes on the screen. In this case, check the following table.

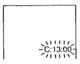

First three digits	Cause and/or Corrective Action
C13	• The disc is dirty. → Clean the disc with a cleaning cloth. (page 38)
C31	• The disc is not inserted correctly. → Open the disc tray and insert the disc correctly.
Exx (xx is any number)	• To prevent the player from operating malfunctioning, the self-diagnosis function has worked. → When you contact your Sony dealer or local authorized Sony service facility, inform the service number with five digits. (example: E:61:10)

Index to Parts and Controls

Refer to the pages indicated in parentheses for details.

Front Panel

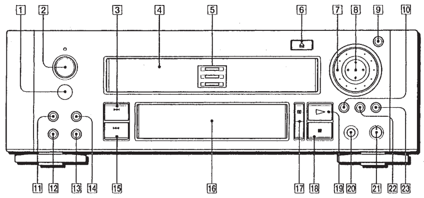

1 (remote sensor) (6)
Accepts the remote control signals.

2 POWER switch and indicator (10, 14)
Turns on and off the power of the player.

3 ►►I NEXT button (11, 15)
Press to go to the next chapter or track.

4 Disc tray (10, 14)
Place a disc on the tray.

5 Disc type indicators (20)
The respective indicator of the disc loaded lights up.

6 ≜OPEN/CLOSE button (10, 14)
Opens or closes the disc tray.

7 Click shuttle (12, 16)
Changes the playback speed.

8 ←/↑/↓/→/ENTER button
Selects and executes the items or settings.

9 JOG button/indicator (12, 16)
Press to play a disc frame by frame.

10 TITLE button (13)
Displays the title menu on the TV screen.

11 SHUFFLE button (24)
Press to execute the shuffle play.

12 PROGRAM button (24)
Press to execute the program play.

13 CLEAR button (22-25)
Press to return to the continuous play etc.

14 REPEAT button (22)
Press to execute the repeat play.

15 I◄◄ PREV button (11, 15)
Press to go back to the preceding chapter or track.

16 Front Panel Display (20)
Indicates the playing time, etc.

17 IIPAUSE button (11, 15)
Pauses playing a disc.

18 ■STOP button (11, 15)
Stops playing a disc.

19 ▷PLAY/SELECT button (10, 14)
Plays a disc.

20 PHONES connector (10, 14)
Connect the headphones to this connector.

21 PHONE LEVEL control (10, 14)
Adjusts the headphone volume.

22 DVD MENU button (13)
Displays the DVD menu on the TV screen.

23 RETURN button (17)
Press to return to the preceding selection screen, etc.

Rear Panel

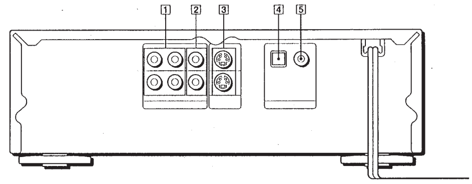

1 LINE OUT (AUDIO 1, 2) connectors (7)
Connects to the audio input connector on the TV or amplifier.

2 LINE OUT (VIDEO 1, 2) connectors (7)
Connects to the video input connector on the TV or monitor.

3 S VIDEO OUT 1, 2 connectors (7)
Connects to the S video input connector on the TV or VCR.

4 DIGITAL OUT (OPTICAL) connector (8)
Connects to an audio component using the optical digital connecting cord.

5 DIGITAL OUT (COAXIAL) connector (8)
Connects to an audio component using the coaxial digital connection cord.

Remote

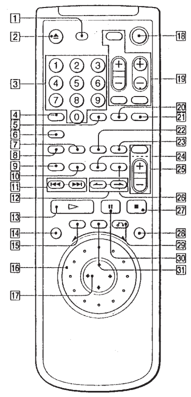

1 DISPLAY button (18)
Displays the current playing status on the TV screen.

2 ≜OPEN/CLOSE button (11, 15)
Opens or closes the disc tray.

3 Number buttons (11, 15)
Selects the items or settings.

4 SEARCH MODE button (11, 15)
Press to select the unit for search (track, index, etc.)

5 ENTER button
Executes the items or settings.

6 DNR button (26)
Reduces the picture noise.

7 PROGRAM button (24)
Press to execute the program play.

8 SHUFFLE button (24)
Press to execute the shuffle play.

9 AUDIO CHANGE button (27)
Changes the sound while playing a DVD or VIDEO CD.

10 ANGLE CHANGE button (29)
Changes the angles when playing a DVD.

11 I◄◄/►►IPREV/NEXT buttons (11, 15)
Press to go to the next chapter or track or to go back to the preceding chapter or track.

12 ◄—/—► INDEX SEARCH buttons (15)
Press to go to the next index or to go back to the preceding index.

13 ▷PLAY/SELECT button (11, 15)
Plays a disc.

14 SET UP button (29, 34)
Displays the setup display on the TV screen to set or adjust the items.

15 TITLE button (13)
Displays the title menu on the TV screen.

16 Click shuttle (12, 16)
Changes the playback speed.

17 ←/↑/↓/→/ENTER button
Selects and executes the items or settings.

18 POWER button (10, 14)
Turns on and off the power of the player.

19 TV operation buttons (32)
Controls Sony TVs.

20 CLEAR button (22-25)
Cancels the number selected with the number buttons.

21 TIME button (20, 21)
Displays the playing time of the disc, etc., on the front panel display.

22 REPEAT button (22)
Press to execute the repeat play.

23 A↔B button (23)
Press to execute the A↔B repeat play.

24 SUBTITLE CHANGE button (28)
Changes the subtitles when playing a DVD.

25 Amplifier operation buttons (33)
Controls Sony (AV) amplifiers.

26 SUBTITLE ON/OFF button (28)
Turns the subtitles on and off when playing a DVD.

27 ■STOP button (11, 15)
Stops playing a disc.

28 JOG button/indicator (12, 16)
Press to play a disc frame by frame.

29 RETURN button (17)
Press to return to the preceding selection screen, etc.

30 IIPAUSE button (11, 15)
Pauses playing a disc.

31 DVD MENU button (13)
Displays the DVD menu on the TV screen.

Setup Display Item List

Default settings are underlined.

- LANGUAGE SETUP (page 35)
  - OSD: ENGLISH (default) / CHINESE
  - DVD MENU: ENGLISH (default) / CHINESE / SPANISH / PORTUGUESE / JAPANESE / FRENCH / GERMAN / ITALIAN / DUTCH / OTHERS→
  - AUDIO: ORIGINAL (default) / (same as DVD MENU)
  - SUBTITLE: AUDIO FOLLOW (default) / (same as DVD MENU)
- 1 INITIAL SETUP 1 (page 36)
  - TV TYPE: 16:9 (default) / 4:3 LETTER BOX / 4:3 PAN SCAN
  - COLOR SYSTEM: AUTO (default) / PAL / NTSC
  - AUTO PLAY: OFF (default) / TIMER / DEMO1 / DEMO2
  - DIMMER: BRIGHT (default) / DARK / OFF
  - BACKGROUND: BLUE (default) / BLACK
  - SCREEN SAVER: ON (default) / OFF
  - PARENTAL CONTROL (page 29)
- 2 INITIAL SETUP 2 (page 37)
  - TRACK SELECTION: OFF (default) / AUTO
  - SURROUND: ON (default) / OFF
  - DIGITAL OUT: PCM (default) / DOLBY DIGITAL / PCM
  - AUDIO DRC: OFF (default) / ON
  - AUDIO ATT: OFF (default) / ON

Language Code List

For details, see page 35.

The language spellings conform to the ISO 639: 1988 (E/F) standard.

Code	Language	Code	Language	Code	Language	Code	Language
1027	Afar	1186	Scots Gaelic	1350	Malayalam	1513	Siswati
1028	Abkhazian	1194	Galician	1352	Mongolian	1514	Sesotho
1032	Afrikaans	1196	Guarani	1353	Moldavian	1515	Sundanese
1039	Amharic	1203	Gujarati	1356	Marathi	1516	Swedish
1044	Arabic	1209	Hausa	1357	Malay	1517	Swahili
1045	Assamese	1217	Hindi	1358	Maltese	1521	Tamil
1051	Aymara	1226	Croatian	1363	Burmese	1525	Telugu
1052	Azerbaijani	1229	Hungarian	1365	Nauru	1527	Tajik
1053	Bashkir	1233	Armenian	1369	Nepali	1528	Thai
1057	Byelorussian	1235	Interlingua	1376	Dutch	1529	Tigrinya
1059	Bulgarian	1239	Interlingue	1379	Norwegian	1531	Turkmen
1060	Bihari	1245	Inupiak	1393	Occitan	1532	Tagalog
1061	Bislama	1248	Indonesian	1403	(Afan) Oromo	1534	Setswana
1066	Bengali; Bangla	1253	Icelandic	1408	Oriya	1535	Tonga
1067	Tibetan	1254	Italian	1417	Punjabi	1538	Turkish
1070	Breton	1257	Hebrew	1428	Polish	1539	Tsonga
1079	Catalan	1261	Japanese	1435	Pashto; Pushto	1540	Tatar
1093	Corsican	1269	Yiddish	1436	Portuguese	1543	Twi
1097	Czech	1283	Javanese	1463	Quechua	1557	Ukrainian
1103	Welsh	1287	Georgian	1481	Rhaeto-Romance	1564	Urdu
1105	Danish	1297	Kazakh	1482	Kirundi	1572	Uzbek
1109	German	1298	Greenlandic	1483	Romanian	1581	Vietnamese
1130	Bhutani	1299	Cambodian	1489	Russian	1587	Volapük
1142	Greek	1300	Kannada	1491	Kinyarwanda	1613	Wolof
1144	English	1301	Korean	1495	Sanskrit	1632	Xhosa
1145	Esperanto	1305	Kashmiri	1498	Sindhi	1665	Yoruba
1149	Spanish	1307	Kurdish	1501	Sangho	1684	Chinese
1150	Estonian	1311	Kirghiz	1502	Serbo-Croatian	1697	Zulu
1151	Basque	1313	Latin	1503	Singhalese	1703	Not specified
1157	Persian	1326	Lingala	1505	Slovak		
1165	Finnish	1327	Laothian	1506	Slovenian		
1166	Fiji	1332	Lithuanian	1507	Samoan		
1171	Faroese	1334	Latvian; Lettish	1508	Shona		
1174	French	1345	Malagasy	1509	Somali		
1181	Frisian	1347	Maori	1511	Albanian		
1183	Irish	1349	Macedonian	1512	Serbian		

SECTION 2
DISASSEMBLY

NOTE: Follow the disassembly procedure in the numerical order given.

2-1. UPPER CASE

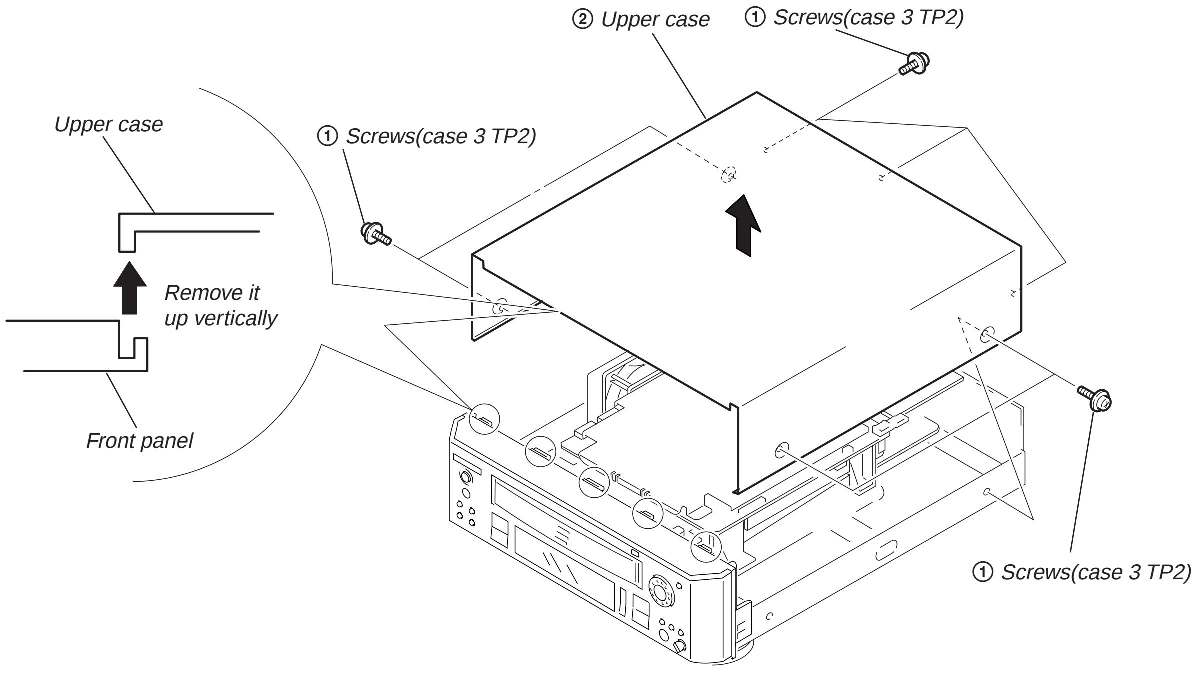

2-2. FRONT PANEL BLOCK ASSEMBLY

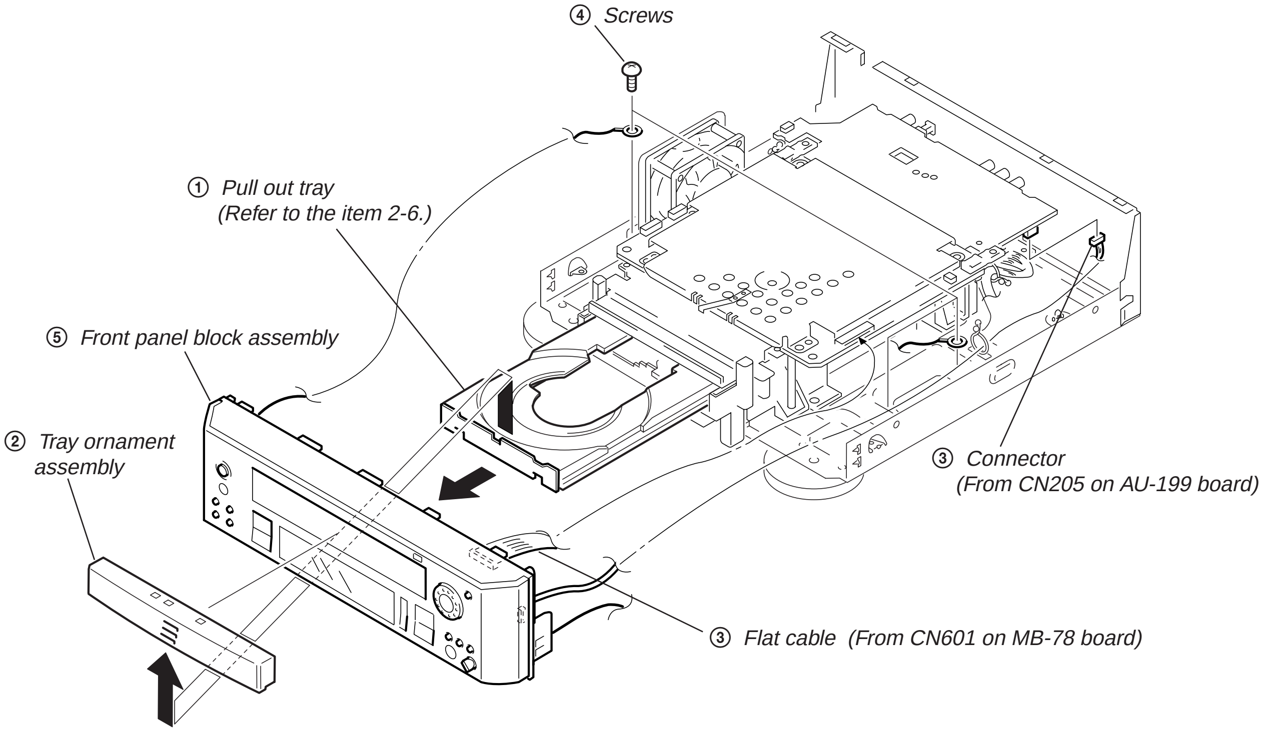

2-3. AU-199 BOARD

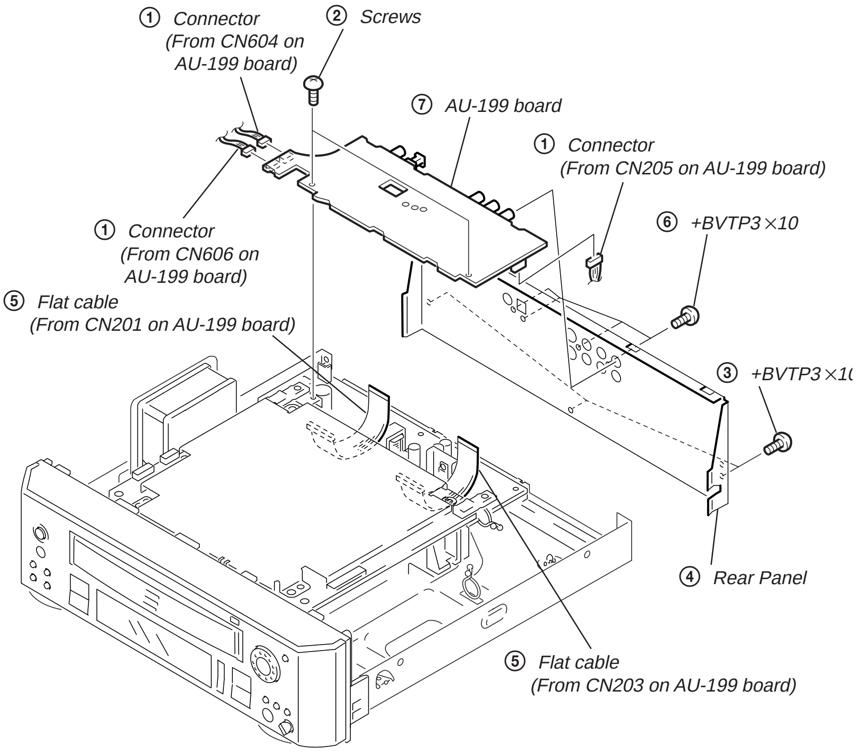

2-4. MB-78 BOARD

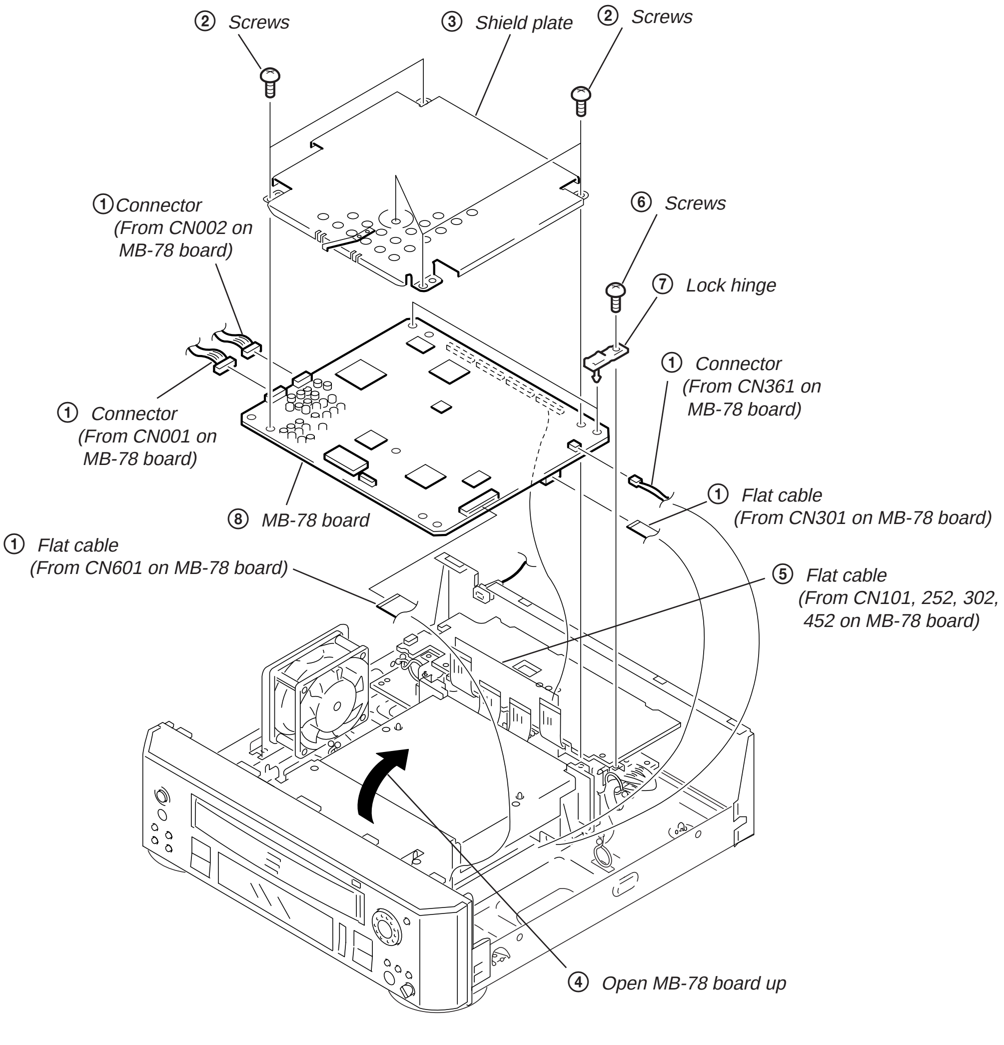

2-5. TK-47 BOARD, MECHANISM DECK

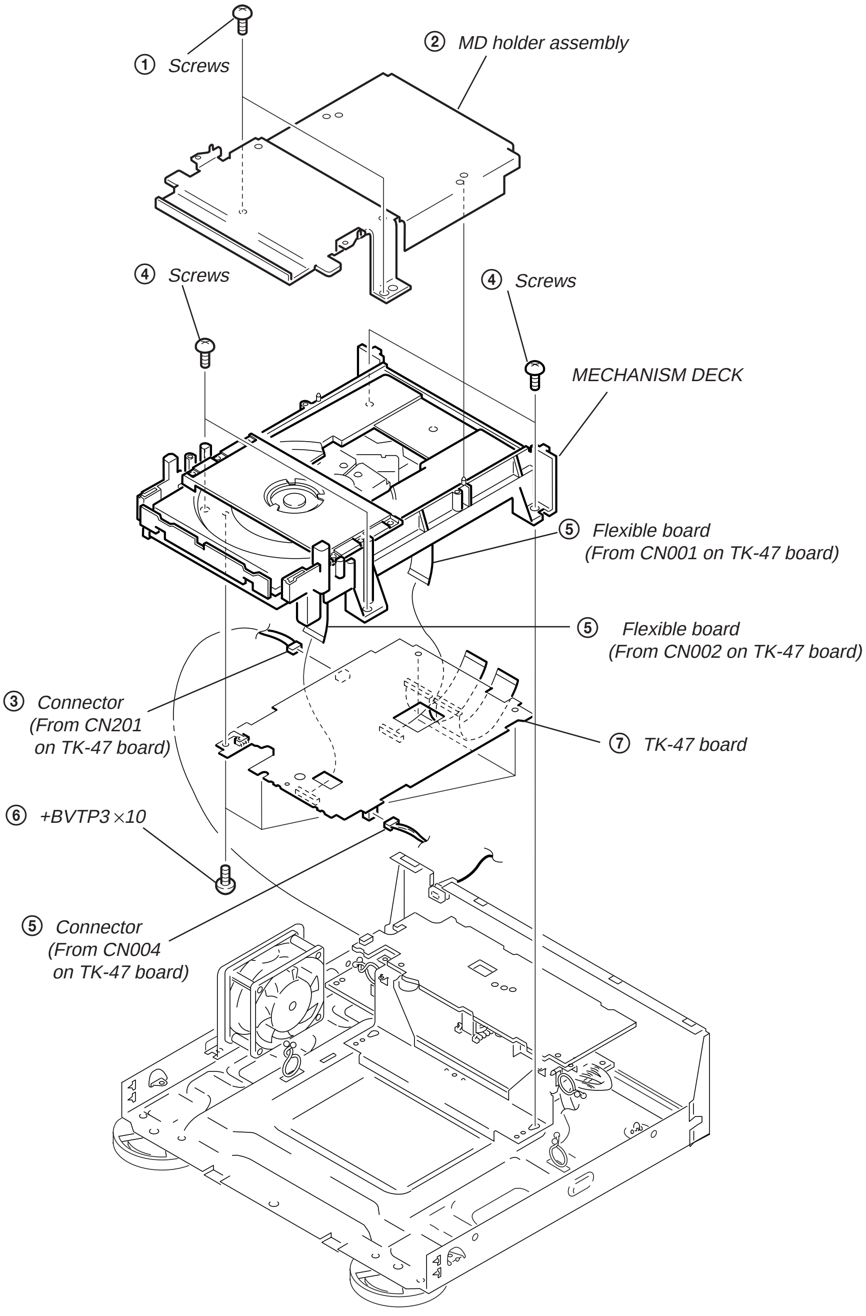

2-6. TRAY

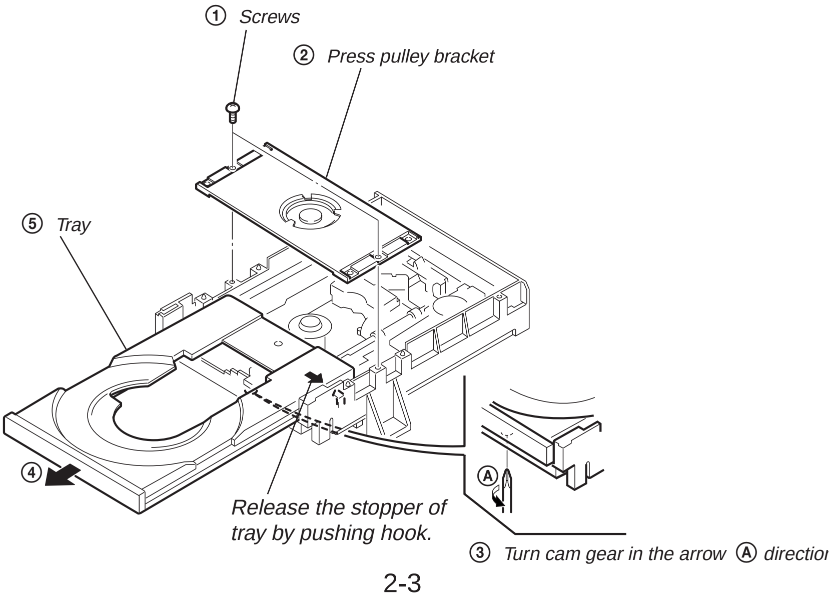

2-7. OPTICAL DEVICE

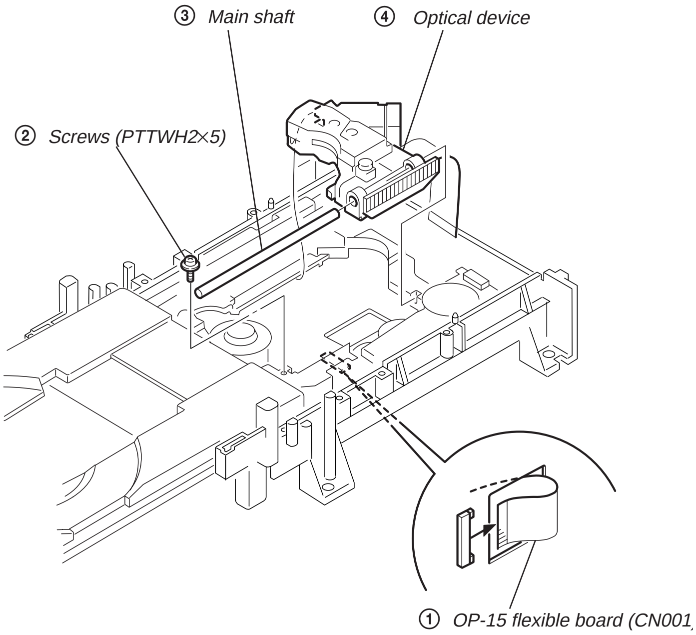

2-8. INTERNAL VIEWS

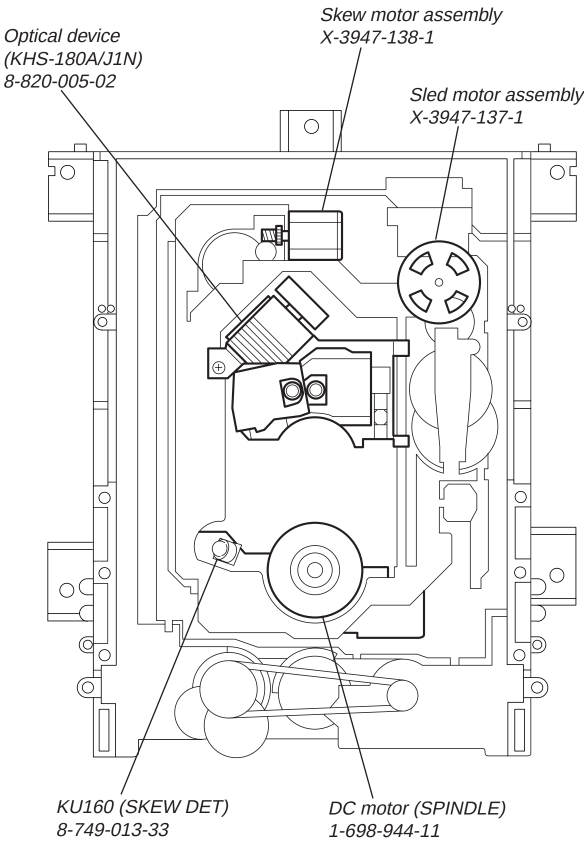

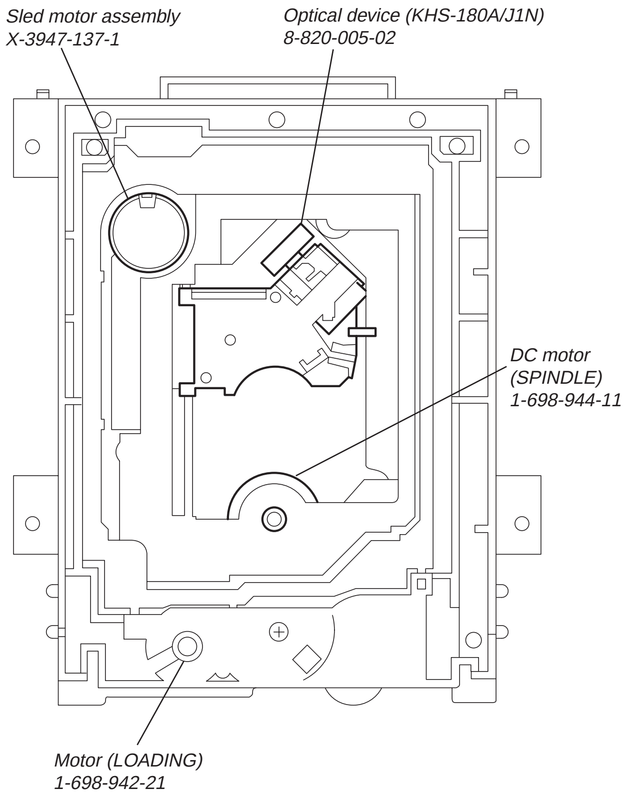

2-9. CIRCUIT BOARDS LOCATION

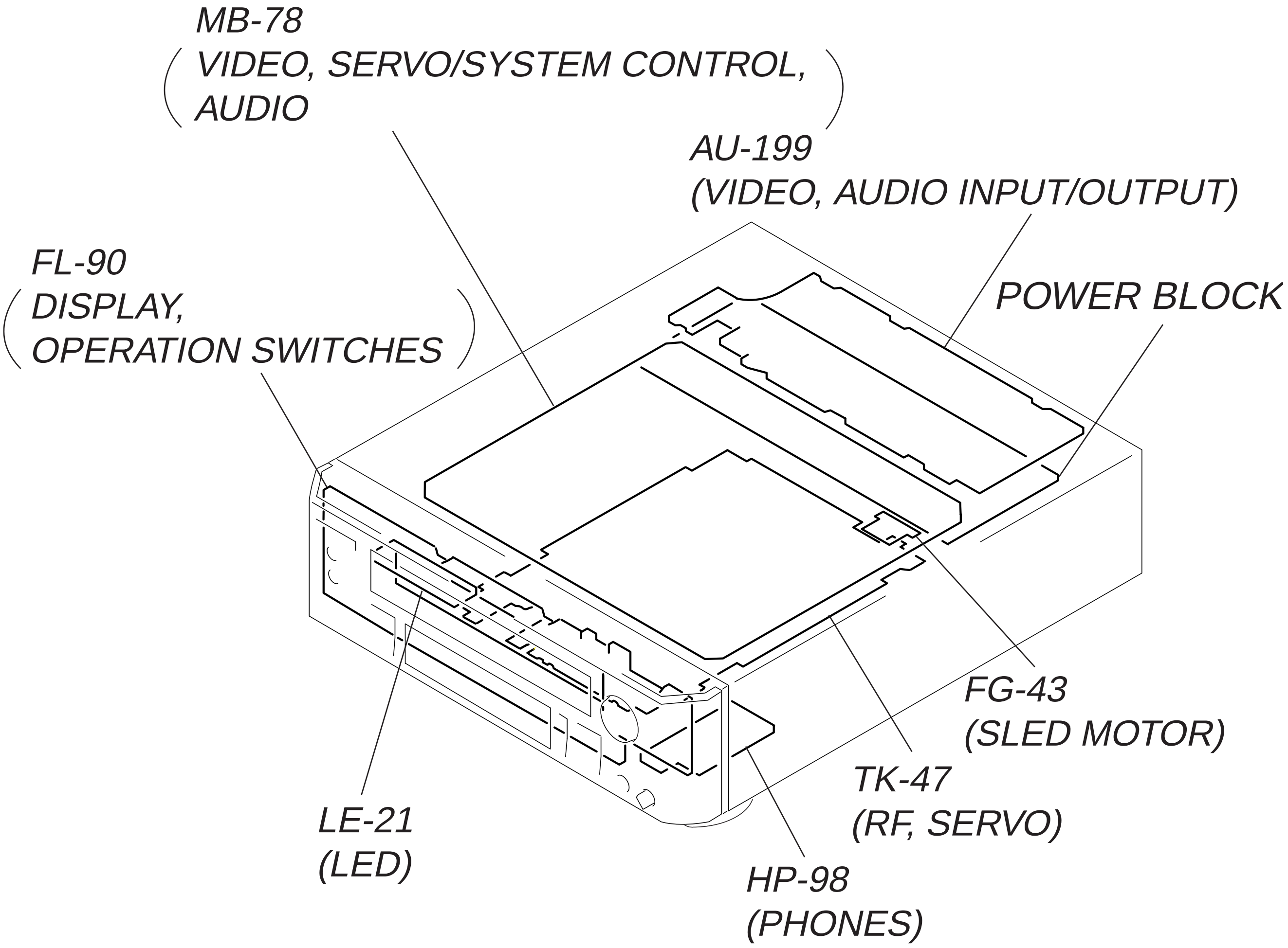

SECTION 3
BLOCK DIAGRAMS

3-1. OVERALL BLOCK DIAGRAM

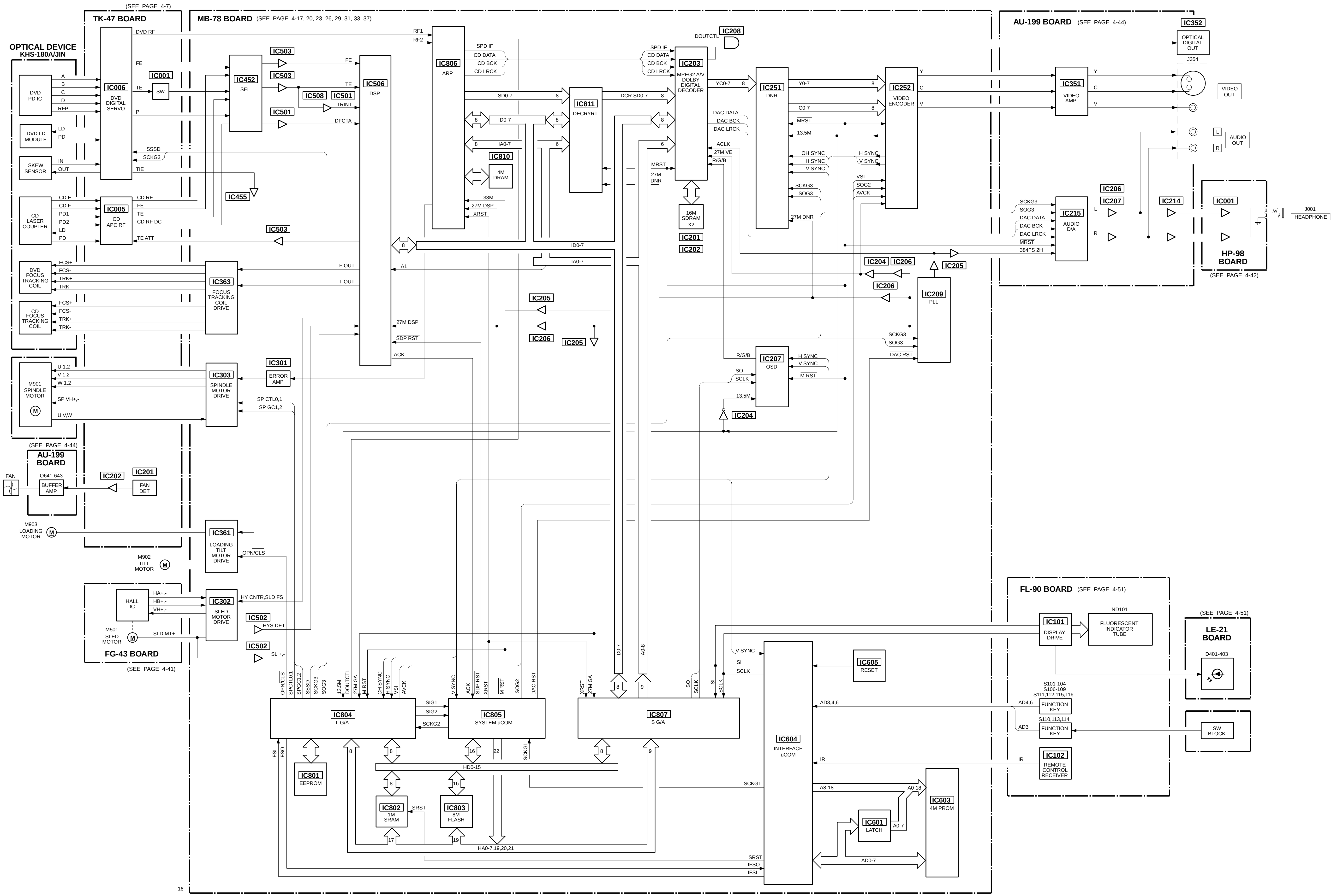

3-2. RF/SERVO BLOCK DIAGRAM

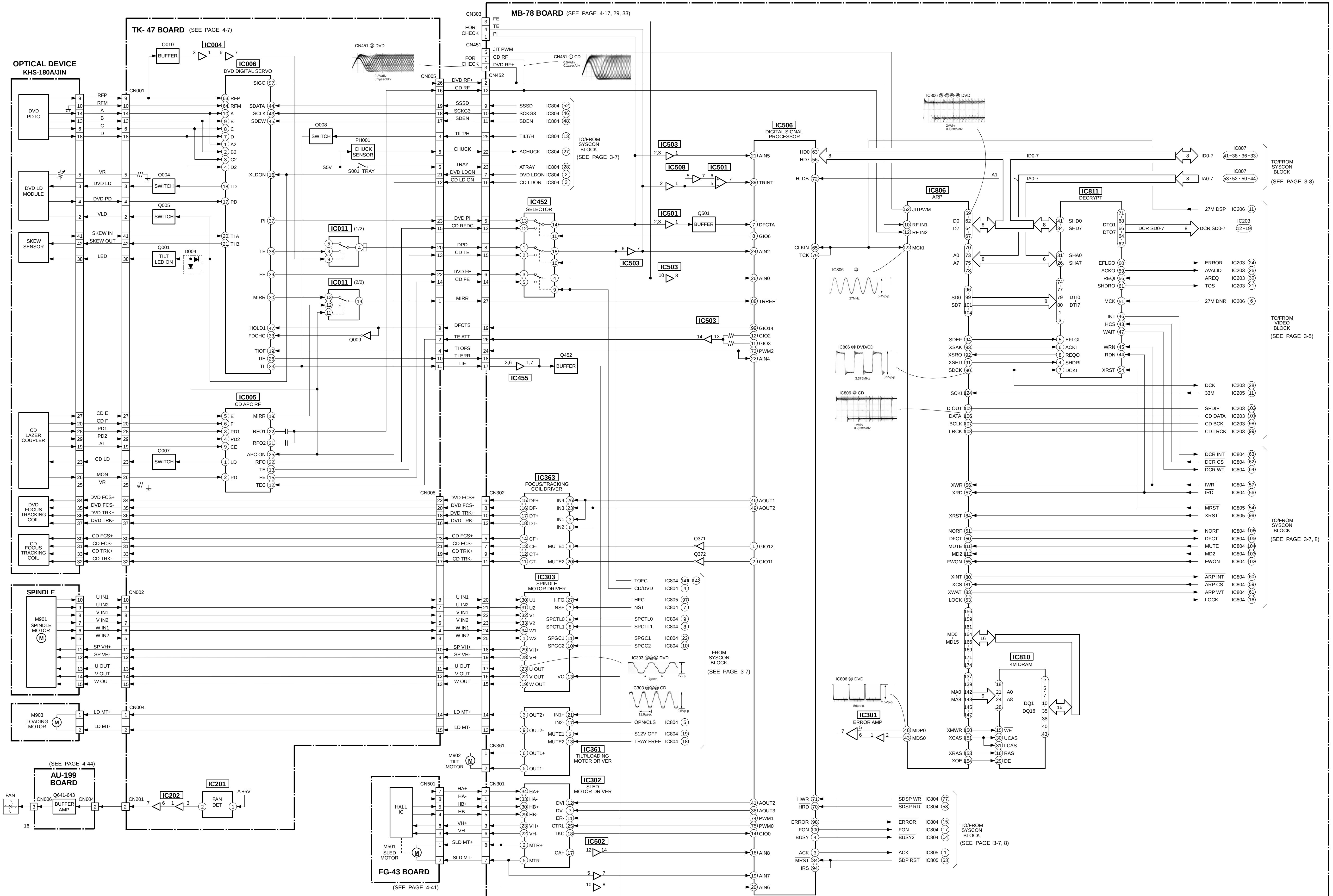

3-3. VIDEO/AUDIO BLOCK DIAGRAM

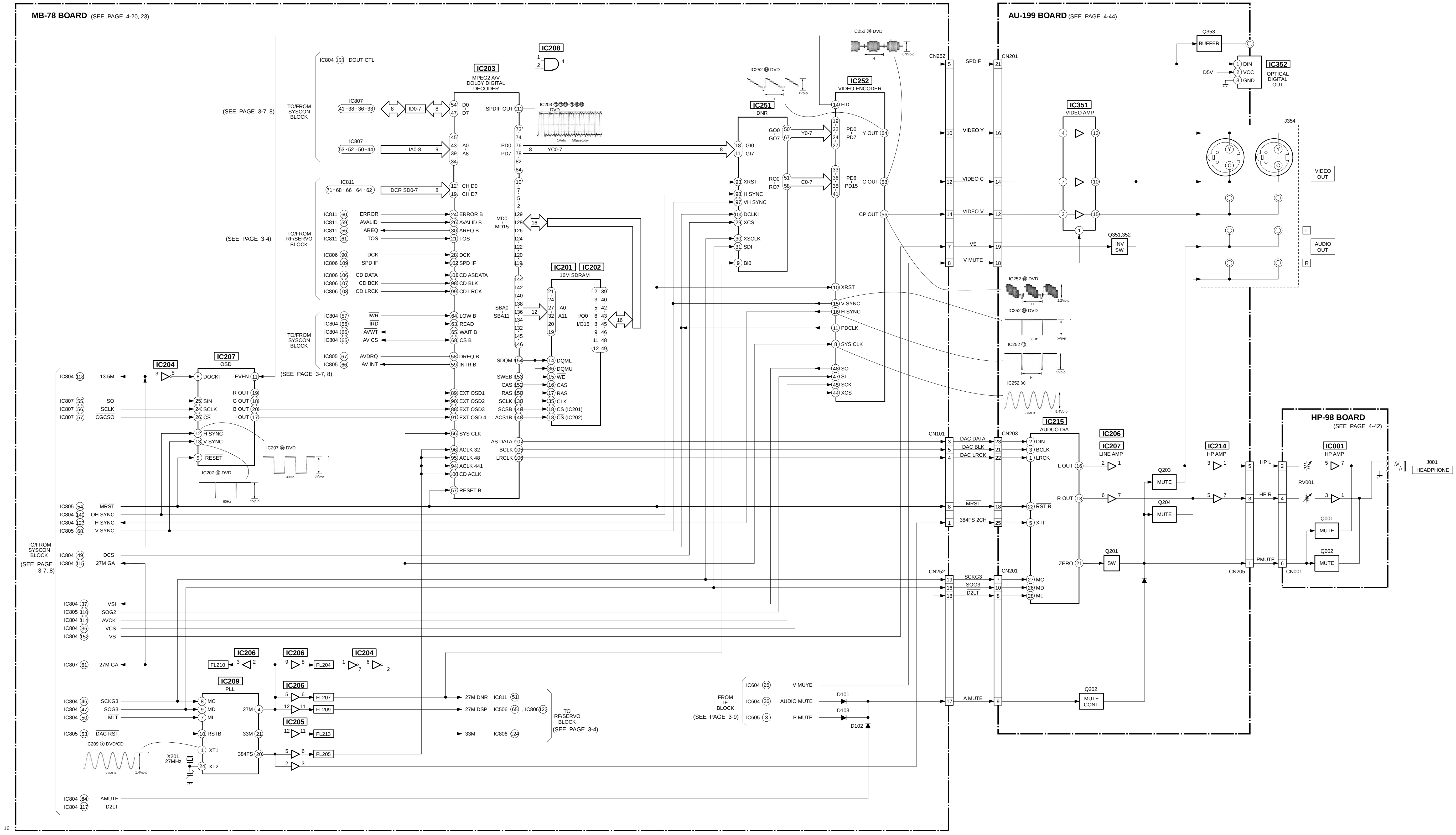

3-4. SYSTEM CONTROL BLOCK DIAGRAM

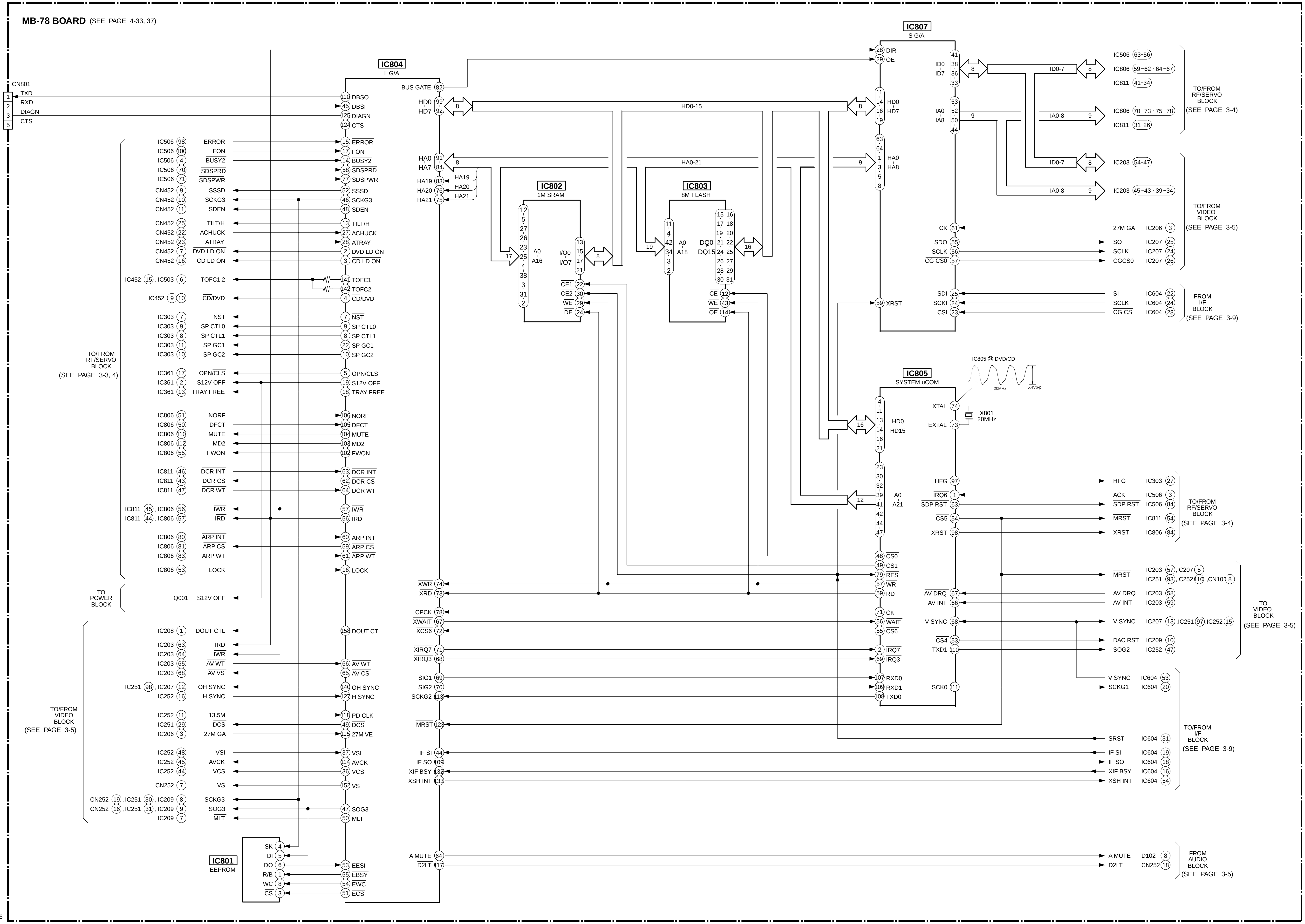

3-5. MODE CONTROL BLOCK DIAGRAM

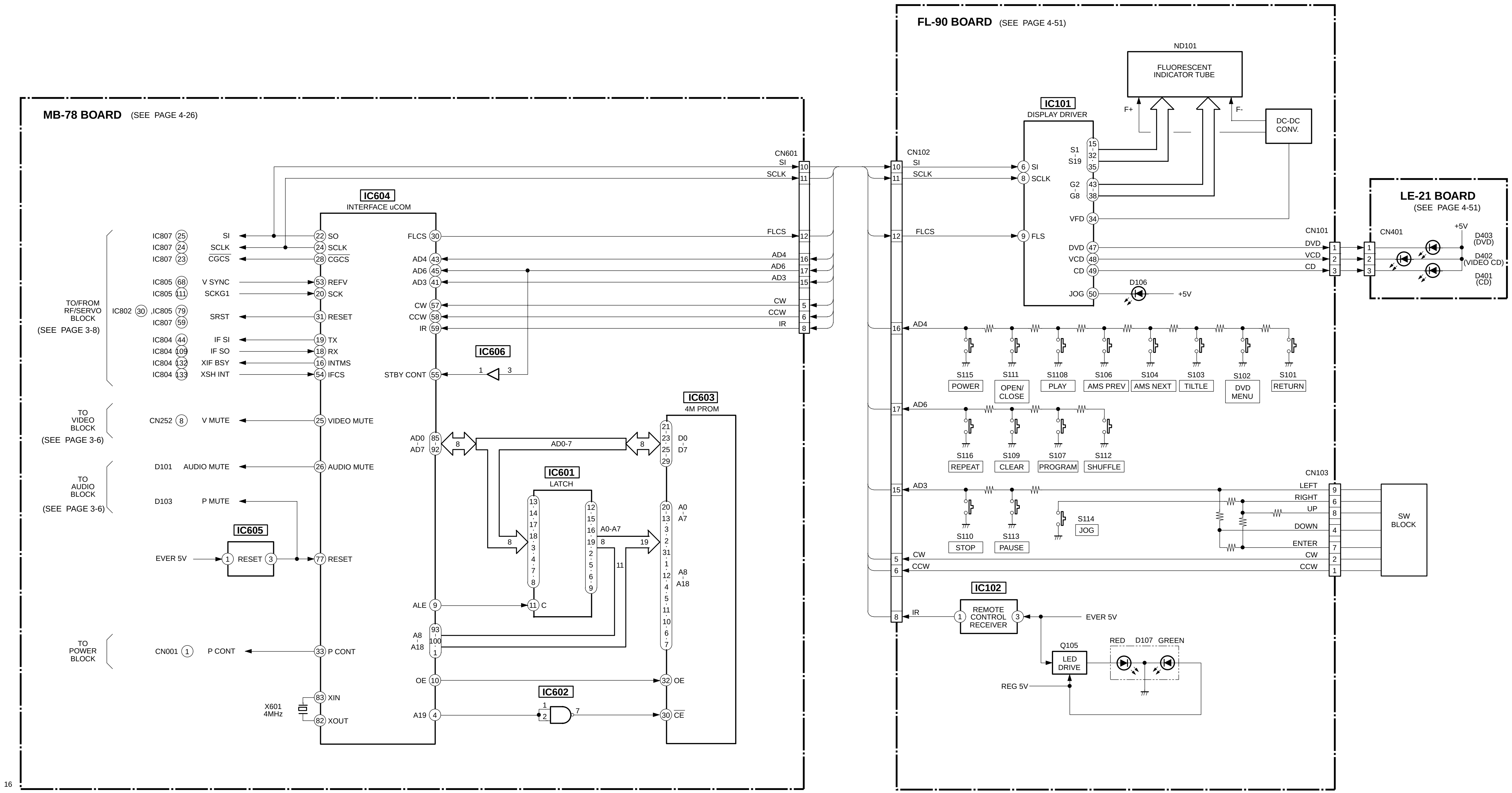

3-6. POWER SUPPLY BLOCK DIAGRAM

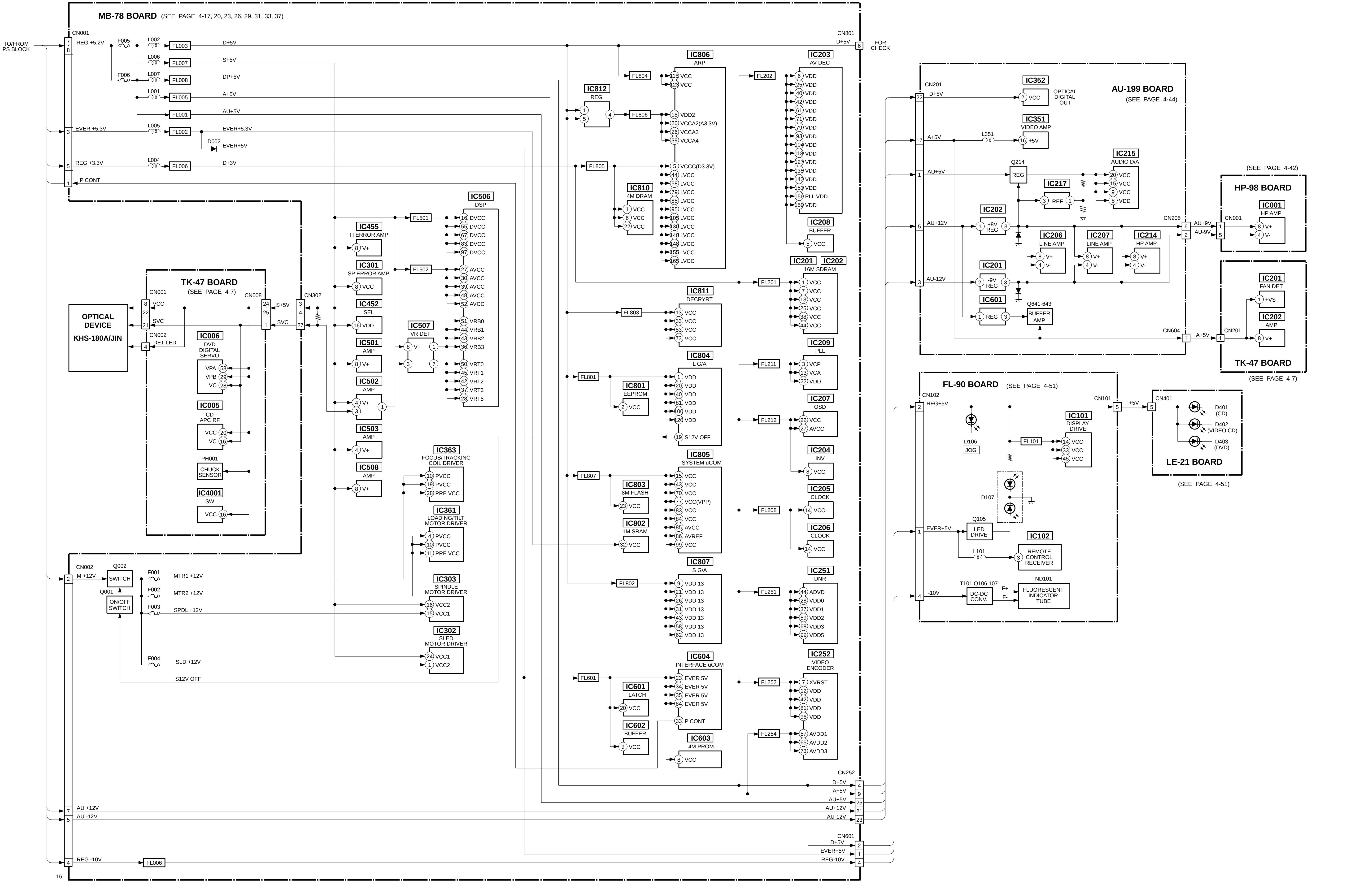

SECTION 4
PRINTED WIRING BOARDS AND SCHEMATIC DIAGRAMS

4-1. FRAME SCHEMATIC DIAGRAM

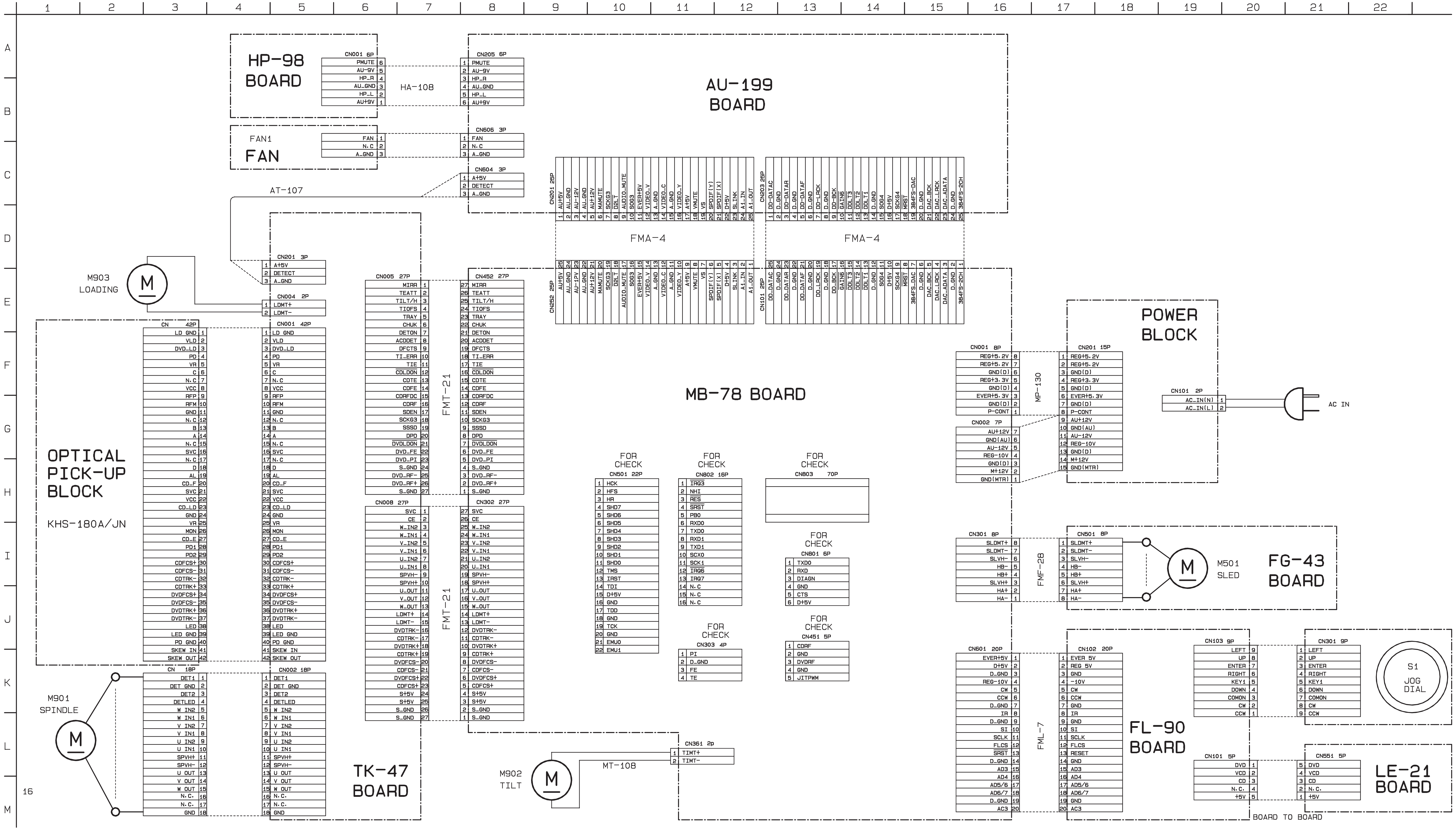

4-2. PRINTED WIRING BOARDS AND SCHEMATIC DIAGRAMS

THIS NOTE IS COMMON FOR WIRING BOARDS AND SCHEMATIC DIAGRAMS
(In addition to this, the necessary note is printed in each block)

(For printed wiring boards)

- ░░░░: Pattern from the side which enables seeing. (The other layers' patterns are not indicated.)
- Through hole is omitted.
- Circled numbers refer to waveforms.
- There are few cases that the part printed on diagram isn't mounted in this model.
- Chip parts.

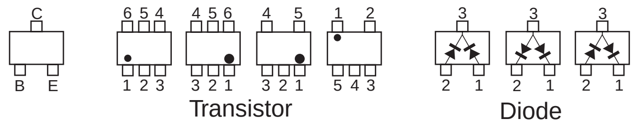

(For schematic diagrams)

- All capacitors are in μF unless otherwise noted. pF : μμF. 50V or less are not indicated except for electrolytics and tantalums.
- Chip resistors are 1/10W unless otherwise noted. kΩ=1000Ω, MΩ=1000kΩ.
- Caution when replacing chip parts. New parts must be attached after removal of chip. Be careful not to heat the minus side of tantalum capacitor, Because it is damaged by the heat.
- Some chip part will be indicated as follows.

Example	C541	L452
	22U	10UH
	TA A	2520

Kinds of capacitor
Temperature characteristics
External dimensions (mm)

- Constants of resistors, capacitors, ICs and etc with XX indicate that they are not used. In such cases, the unused circuits may be indicated.
- All variable and adjustable resistors have characteristic curve B, unless otherwise noted.
- Signal name
  XEDIT → EDIT   PB/XREC → PB/REC
- : non flammable resistor
- : fusible resistor
- : panel designation
- : B+ Line *
- : B– Line *
- : IN/OUT direction of (+,–) B LINE. *
- : adjustment for repair. *
- Circled numbers refer to waveforms. *
- Readings are taken with a color-bar signal playback.
- Voltage are dc between ground and measurement points.*
- Readings are taken with a digital multimeter (DC10MΩ).*
- Voltage variations may be noted due to normal production tolerances.*

* Indicated by the color red.

Note : The components identified by mark ⚠ or dotted line with mark ⚠ are critical for safety. Replace only with part number specified.

TK-47 (RF, SERVO) PRINTED WIRING BOARD
—Ref. No.: TK-47 Board; 3,000 Series—

There are few cases that the part printed on this diagram isn't mounted in this model.

TK-47 BOARD

CN001	D-4
CN002	E-8
CN004	F-7
CN005	C-2
CN008	D-2
CN201	A-3
D003	C-3
D004	E-5
IC004	C-3
IC005	C-4
IC006	D-6
IC011	B-5
IC201	A-4
IC202	A-4
PH001	C-8
Q001	E-5
Q004	E-5
Q005	E-5
Q007	C-4
Q008	D-6
Q009	D-6
Q010	D-4

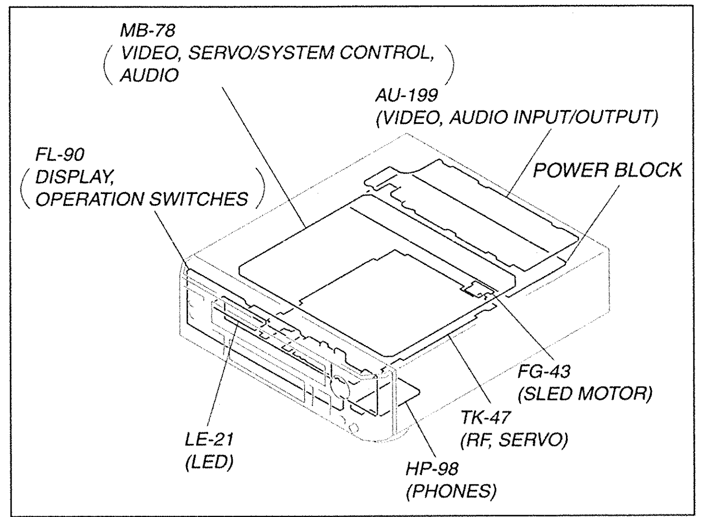

TK-47 BOARD (SIDE A)

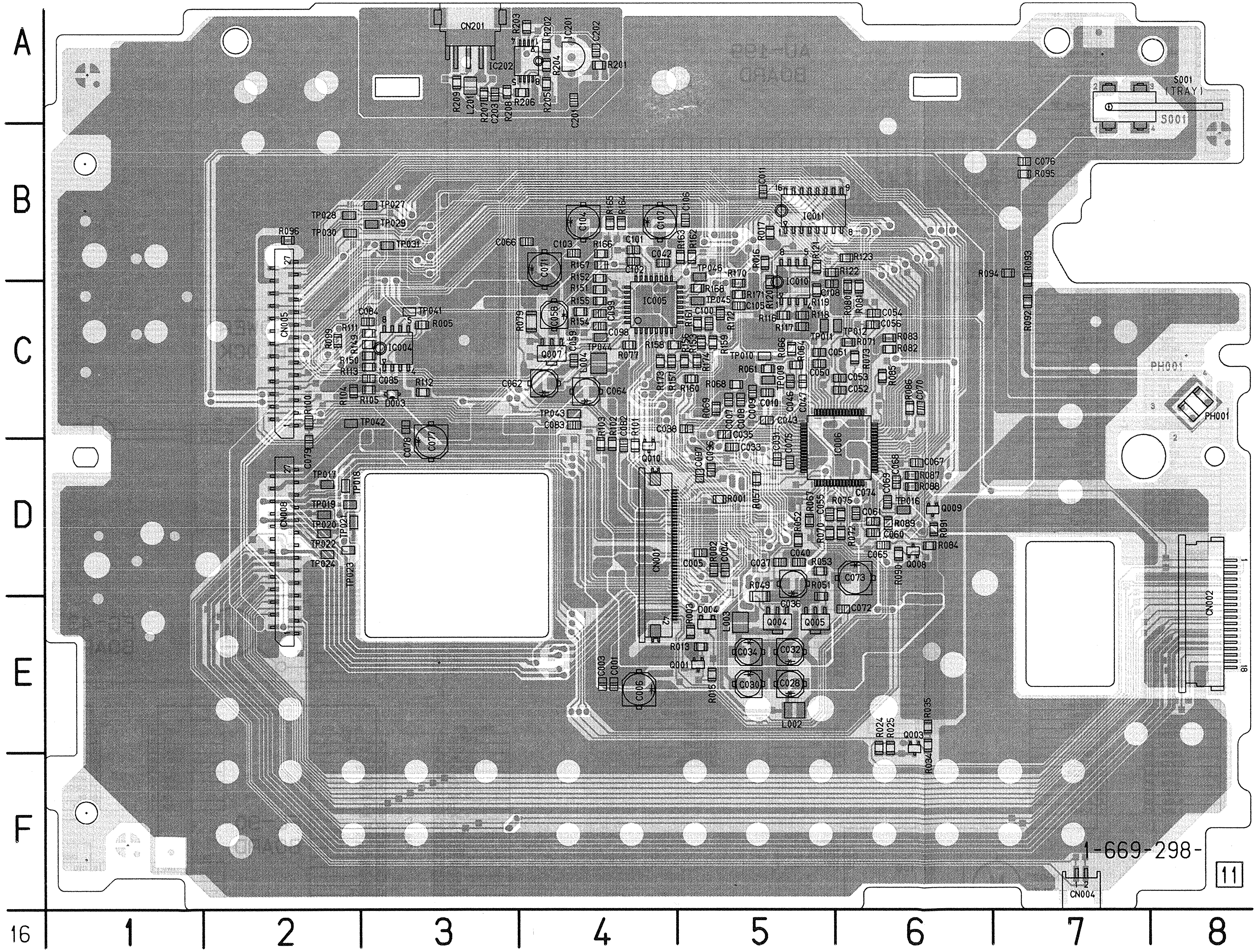

TK-47 (RF, SERVO) SCHEMATIC DIAGRAM

—Ref. No.: TK-47 Board; 3,000 Series—

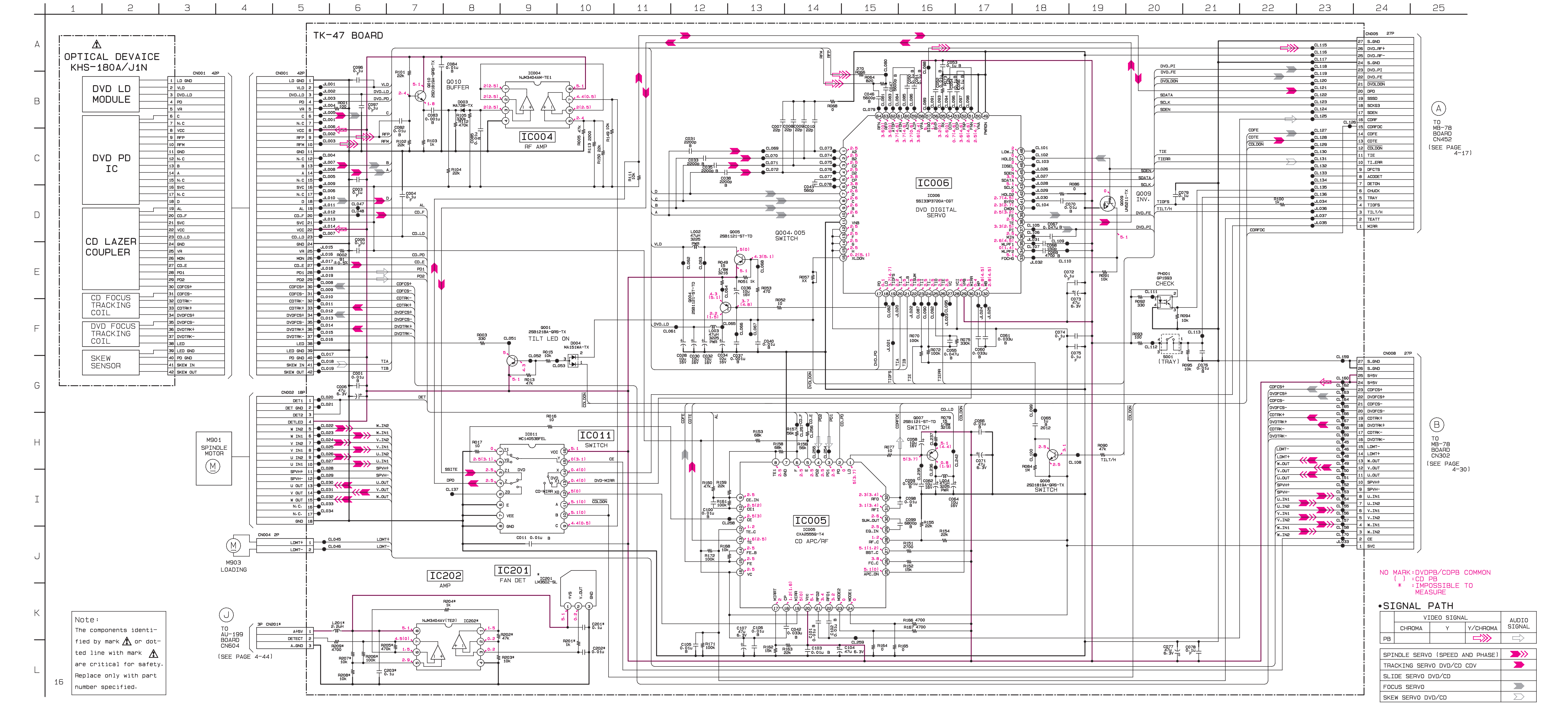

MB-78 (VIDEO, SERVO/SYSTEM CONTROL, AUDIO) PRINTED WIRING BOARD

—Ref. No.: MB-78 Board; 1,000 Series—

MB-78 BOARD

CN001	K-1	IC303	B-12
CN002	I-1	IC361	E-23
CN101	A-23	IC363	F-28
CN252	A-31	IC452	B-26
CN301	D-19	IC455	E-6
CN302	A-25	IC501	C-9
CN303	B-9	IC502	D-25
CN361	C-16	IC503	C-25
CN451	B-6	IC506	F-8
CN452	A-28	IC507	F-25
CN601	J-16	IC508	C-9
CN801	M-10	IC601	L-22
		IC602	L-23
D002	J-33	IC603	L-11
D101	B-30	IC604	J-14
D102	B-5	IC605	I-21
D103	B-30	IC606	K-20
D502	F-25	IC801	J-24
D801	L-13	IC802	L-26
D802	L-25	IC803	L-8
		IC804	J-11
IC201	E-33	IC805	J-6
IC202	G-33	IC806	C-7
IC203	G-3	IC807	L-29
IC204	E-30	IC810	C-27
IC205	F-11	IC811	G-31
IC206	G-11	IC812	C-29
IC207	C-33		
IC208	E-32	Q001	J-32
IC209	G-23	Q002	I-32
IC251	E-3	Q371	F-6
IC252	B-4	Q372	F-6
IC301	B-11	Q452	E-28
IC302	D-23	Q501	B-10

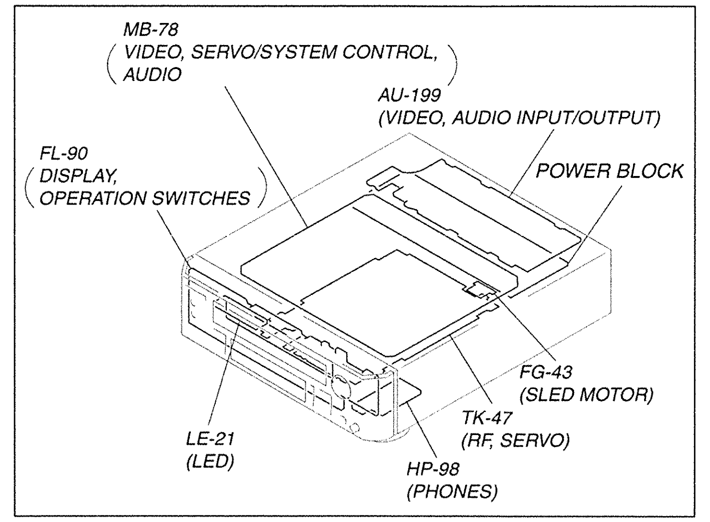

There are few cases that the part printed on this diagram isn't mounted in this model.

MB-78 BOARD (SIDE A)

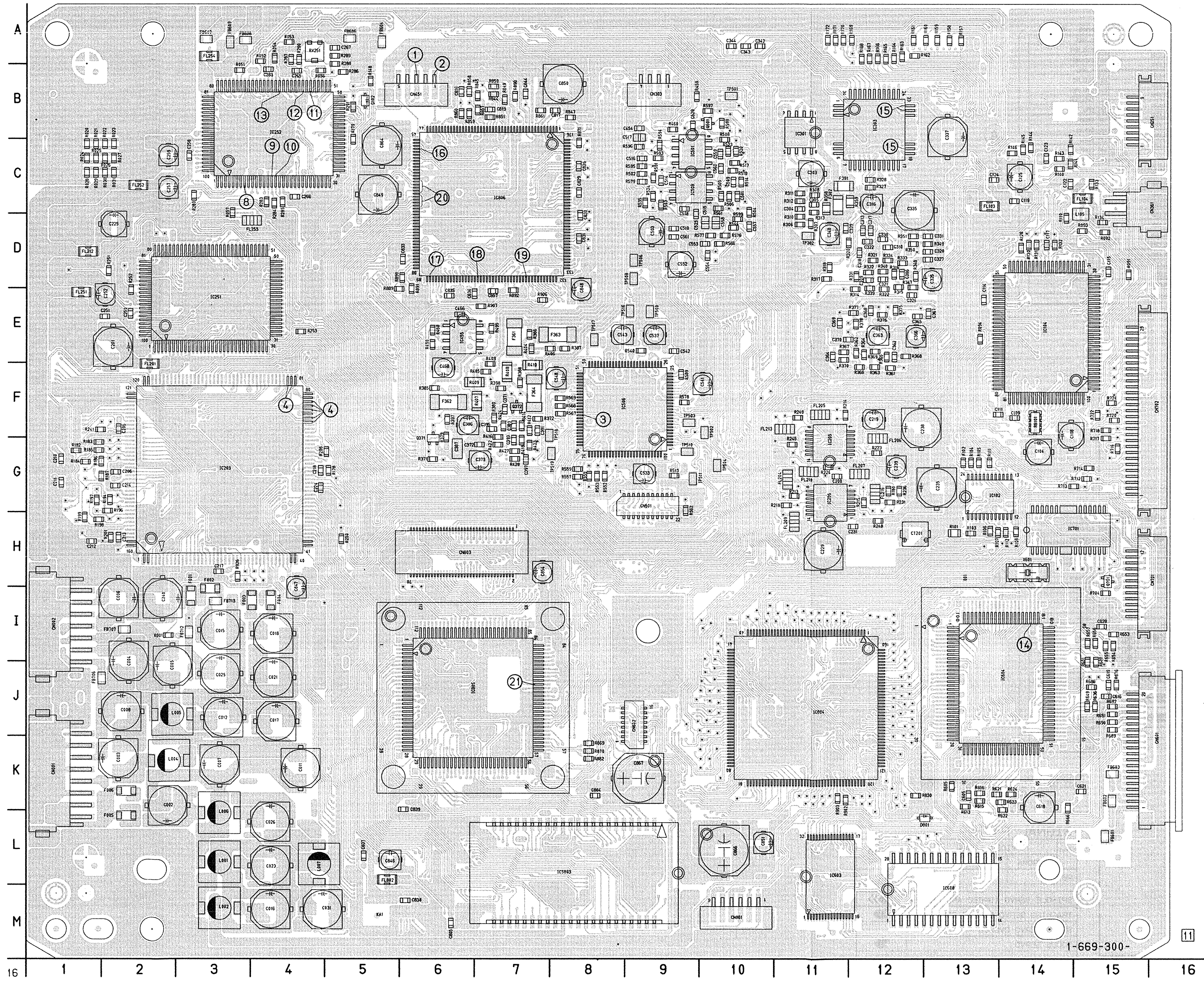

MB-78 BOARD (SIDE B)

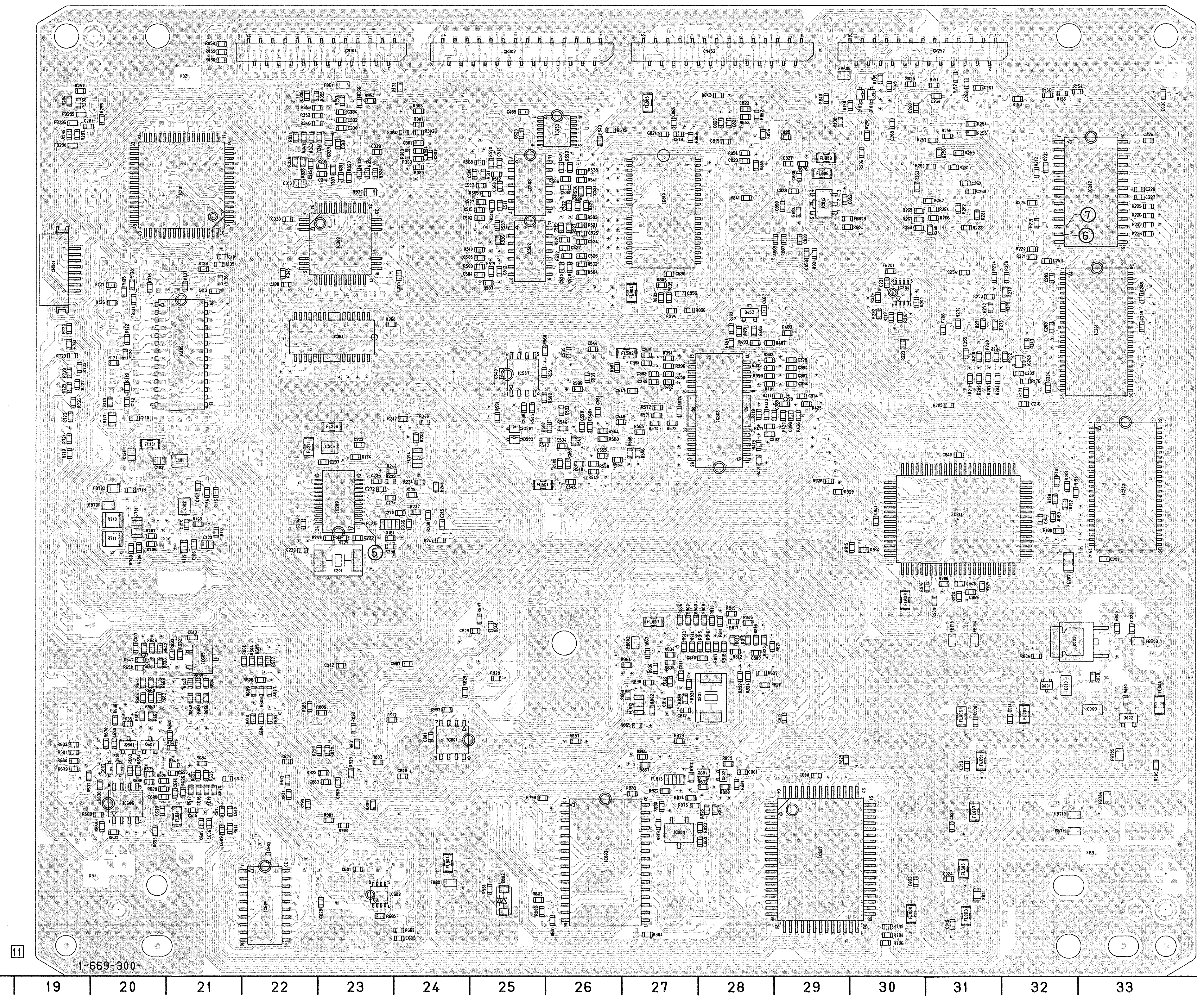

MB-78 (DSP) SCHEMATIC DIAGRAM

—Ref. No.: MB-78 Board; 1,000 Series—

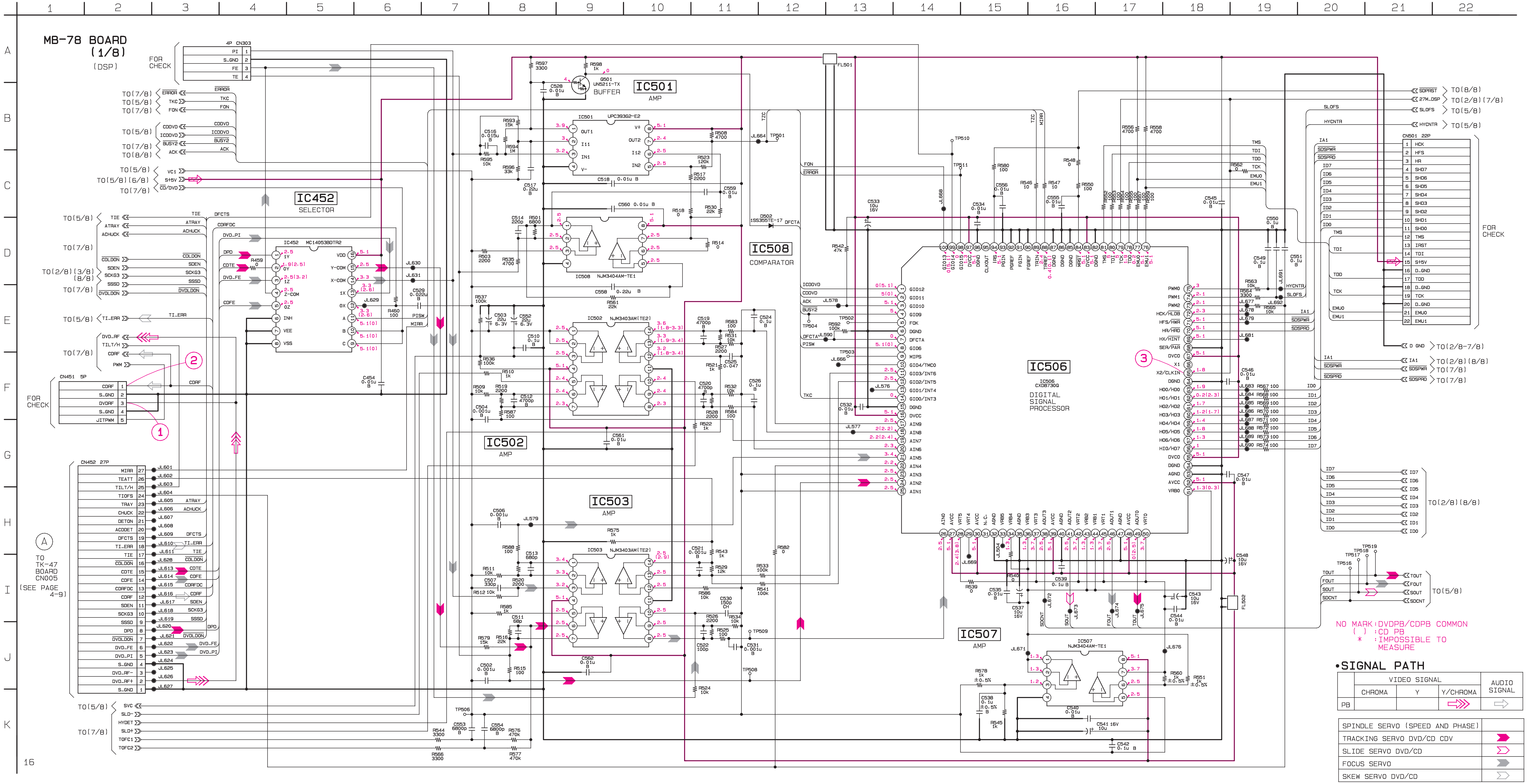

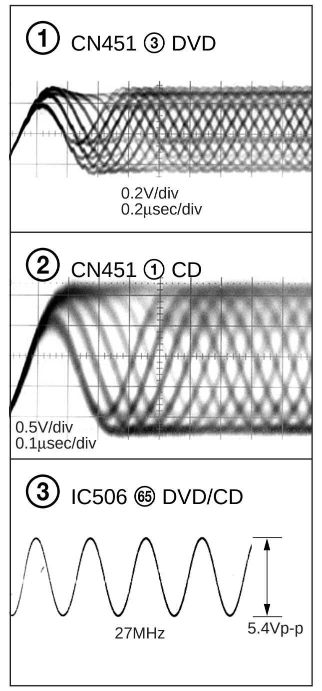

• SIGNAL PATH

	VIDEO SIGNAL			AUDIO SIGNAL
	CHROMA	Y	Y/CHROMA	
PB			⇒	⇒

SPINDLE SERVO (SPEED AND PHASE)	
TRACKING SERVO DVD/CD CDV	➤
SLIDE SERVO DVD/CD	⊳
FOCUS SERVO	➤
SKEW SERVO DVD/CD	⊳

MB-78 (AV DECODER) SCHEMATIC DIAGRAM —Ref. No.: MB-78 Board; 1,000 Series—

• See page 4-13 for MB-78 BOARD printed wiring board.

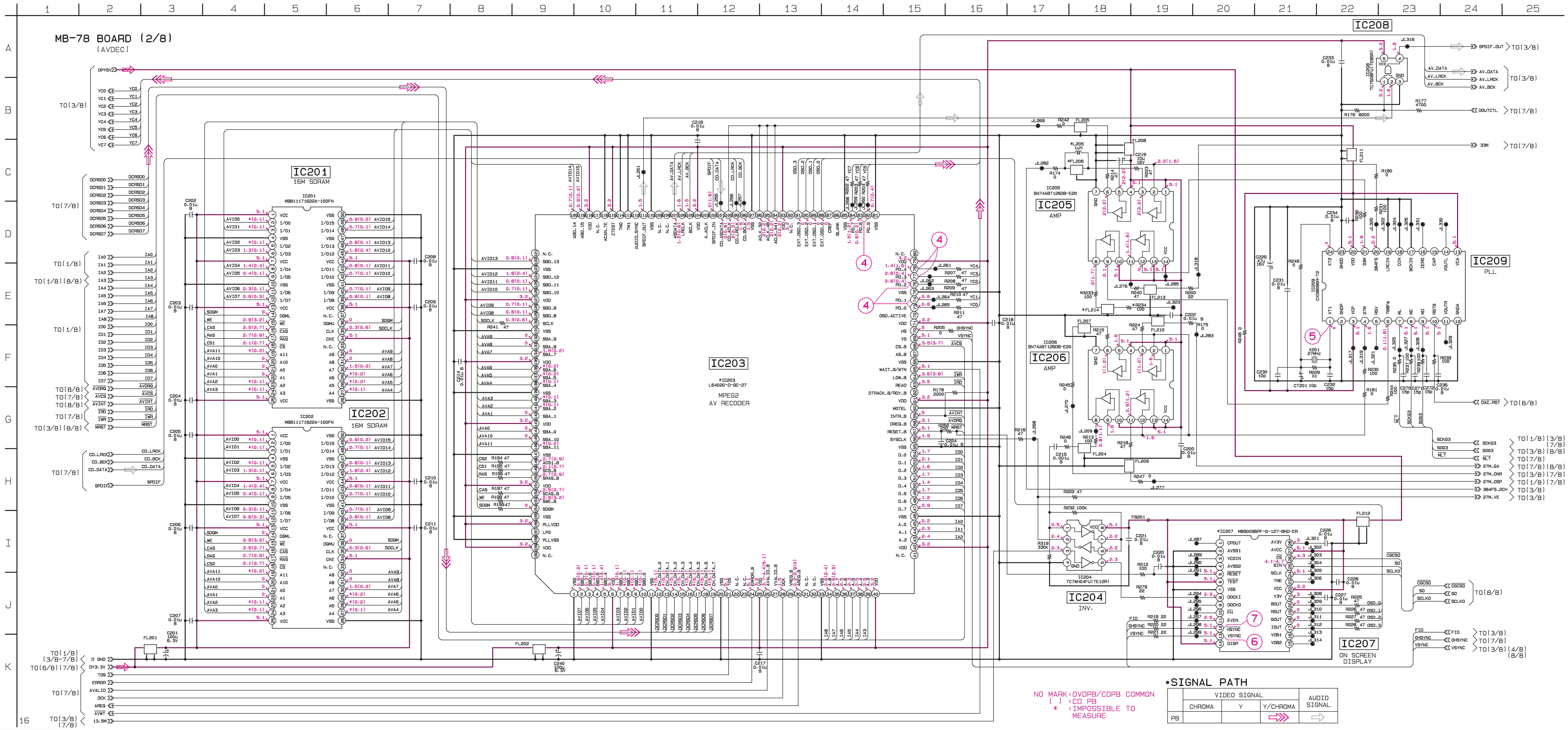

	VIDEO SIGNAL			AUDIO SIGNAL
	CHROMA	Y	Y/CHROMA	
PB			⇨	⇨

MB-78 (VIDEO ENCODER) SCHEMATIC DIAGRAM
—Ref. No.: MB-78 Board; 1,000 Series—

• See page 4-13 for MB-78 BOARD printed wiring board.

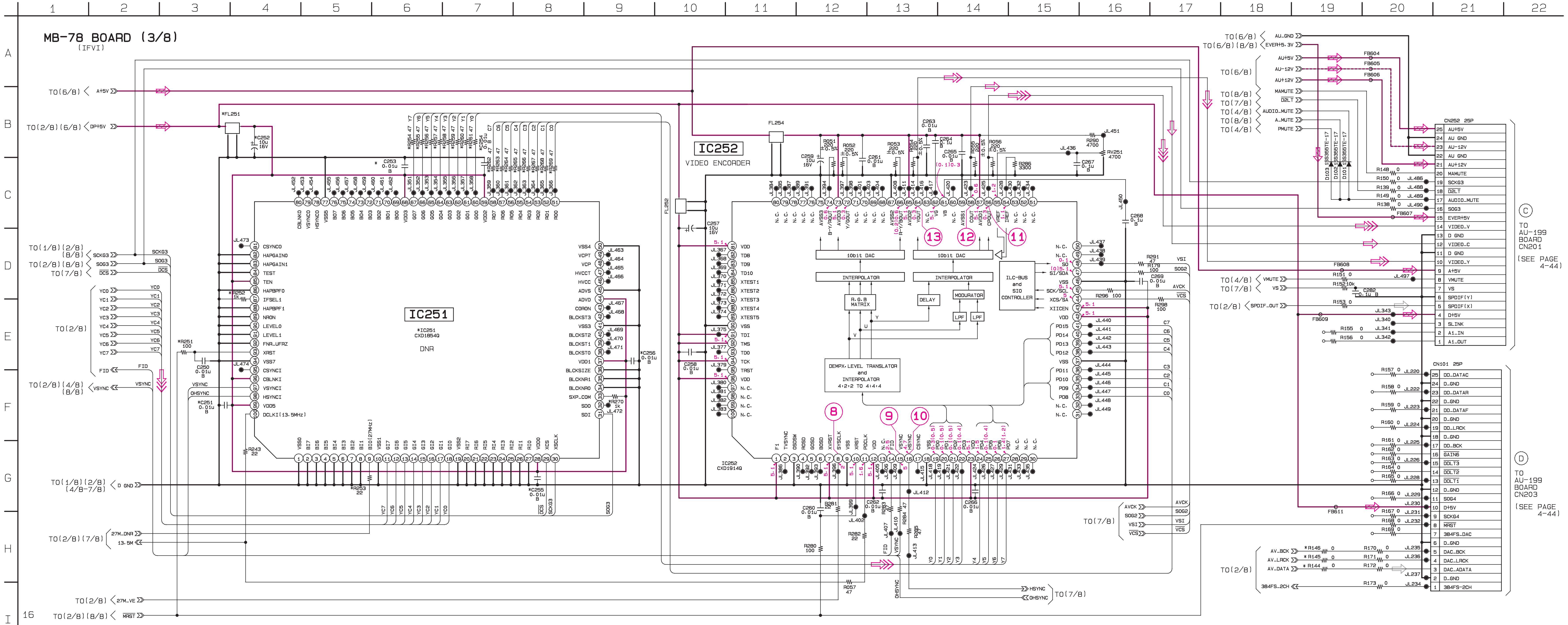

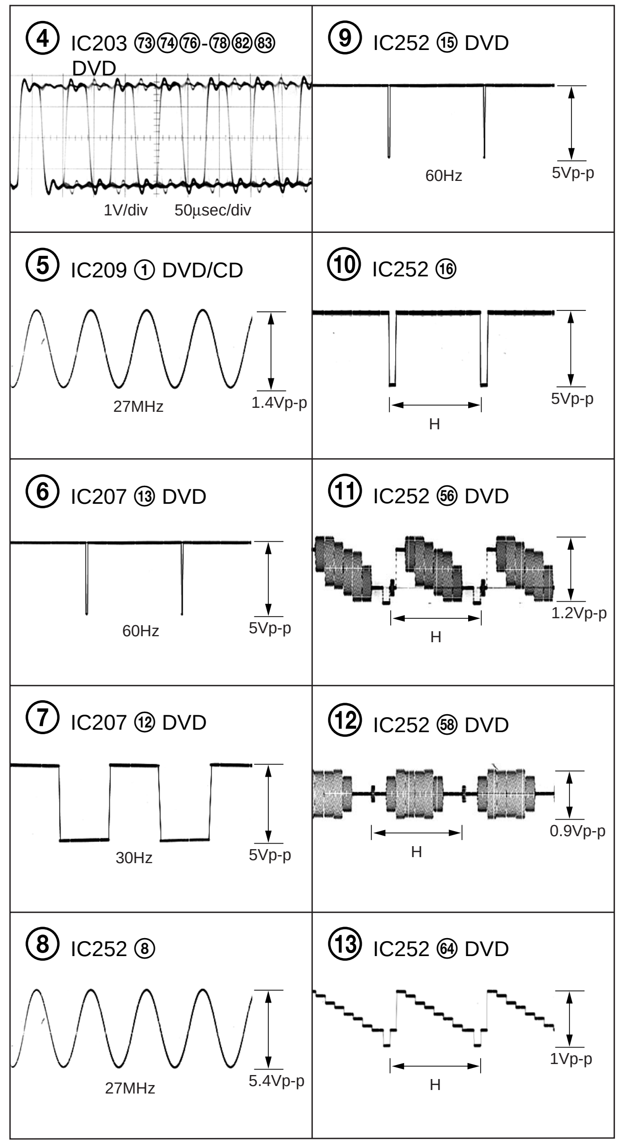

• SIGNAL PATH

	VIDEO SIGNAL			AUDIO SIGNAL
	CHROMA	Y	Y/CHROMA	
PB	⇨	⇨	⇨	⇨

NO MARK: DVDPB/CDPB COMMON
( ) : CD PB
* : IMPOSSIBLE TO MEASURE

MB-78 (INTERFACE) SCHEMATIC DIAGRAM
—Ref. No.: MB-78 Board; 1,000 Series—

• See page 4-13 for MB-78 BOARD printed wiring board.

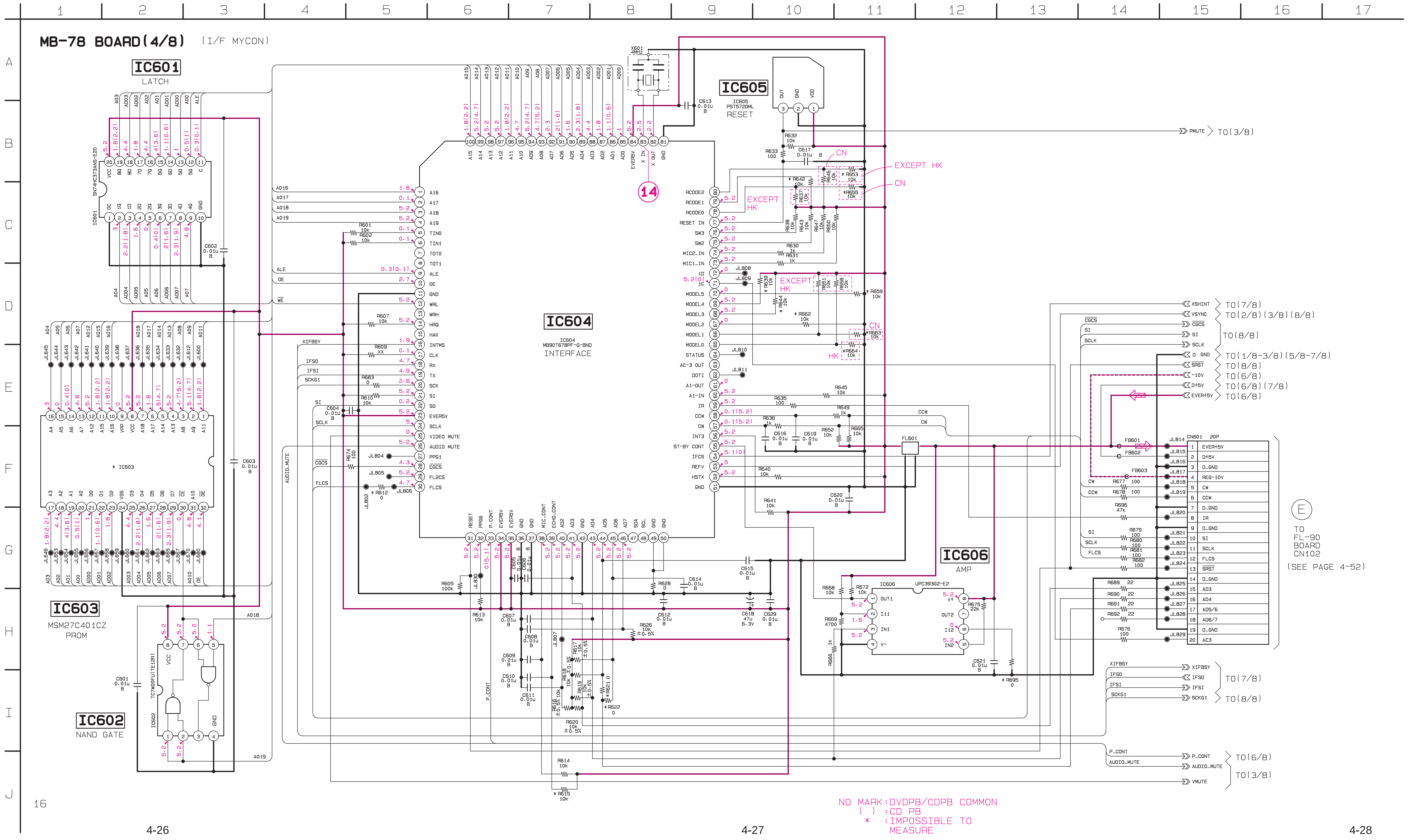

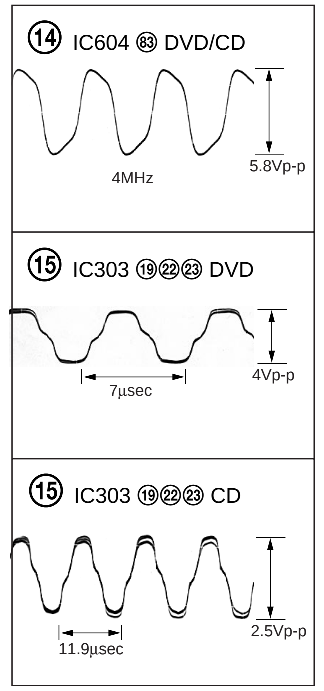

MB-78 (MOTOR DRIVE) SCHEMATIC DIAGRAM
—Ref. No.: MB-78 Board; 1,000 Series—

• See page 4-13 for MB-78 BOARD printed wiring board.

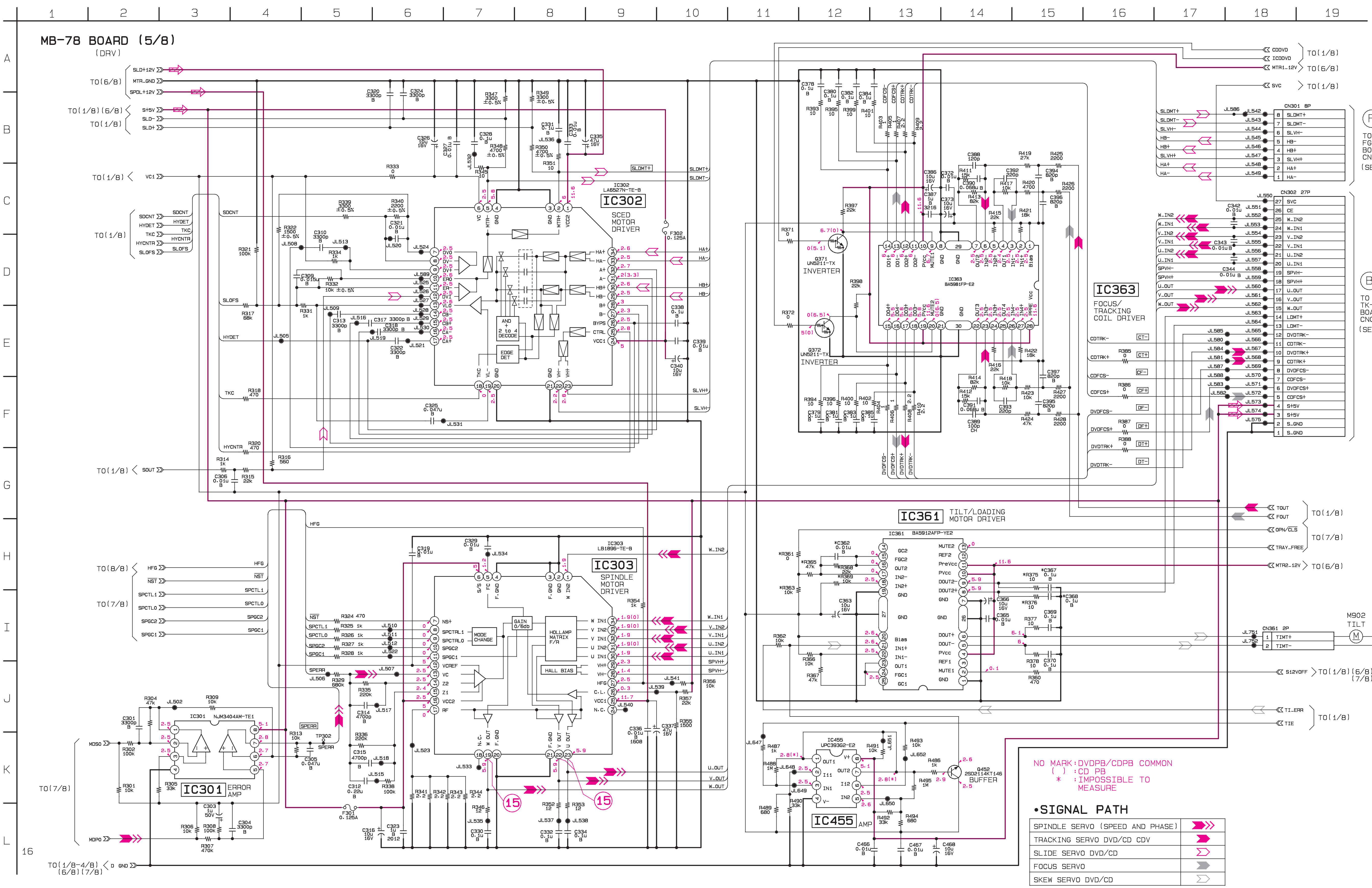

MB-78 (POWER SUPPLY) SCHEMATIC DIAGRAM

—Ref. No.: MB-78 Board; 1,000 Series—

• See page 4-13 for MB-78 BOARD printed wiring board.

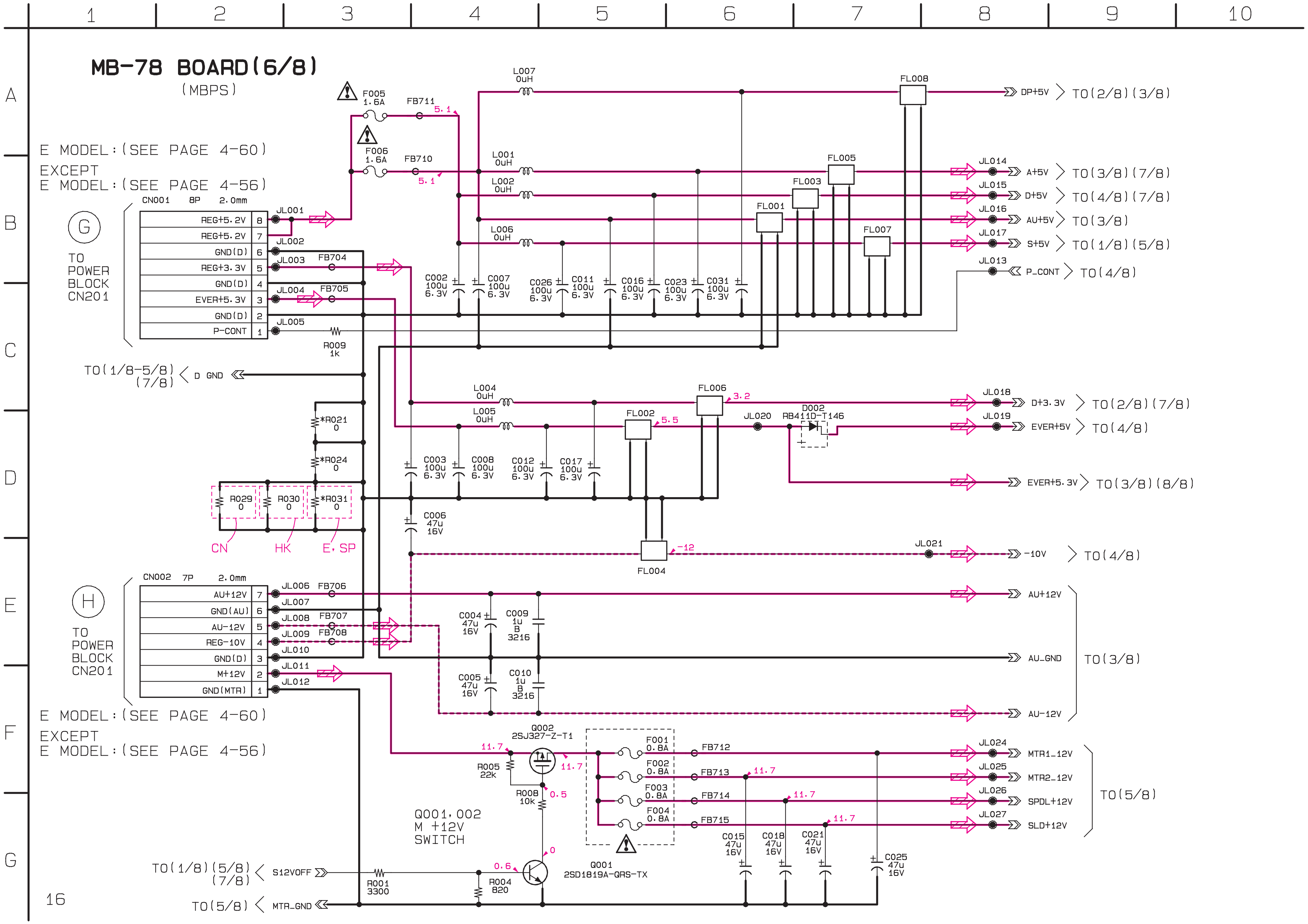

Note:
The components identified by mark ⚠ or dotted line with mark ⚠ are critical for safety.
Replace only with part number specified.

NO MARK: DVDPB/CDPB COMMON
( ) : CD PB
* : IMPOSSIBLE TO MEASURE

MB-78 (DIGITAL PROCESS 1) SCHEMATIC DIAGRAM • See page 4-13 for MB-78 BOARD printed wiring board.

—Ref. No.: MB-78 Board; 1,000 Series—

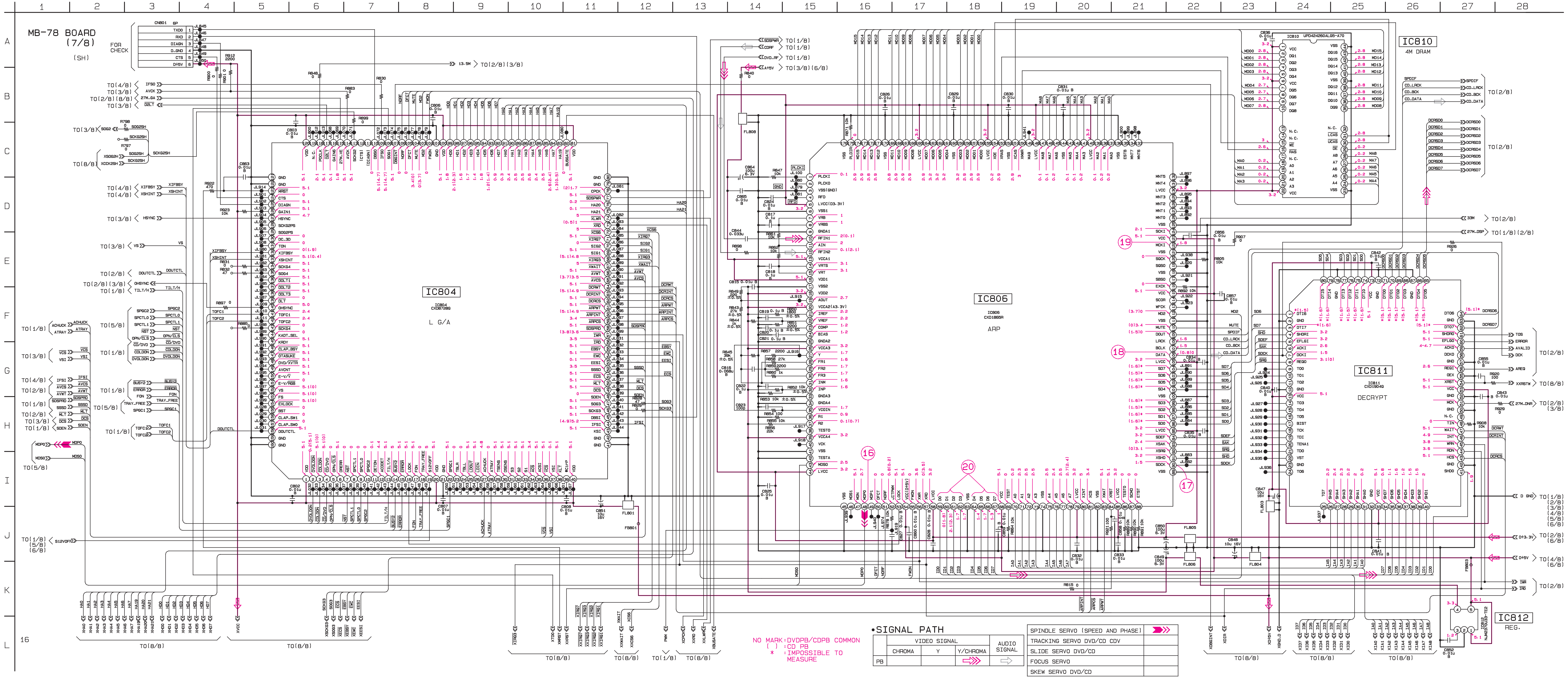

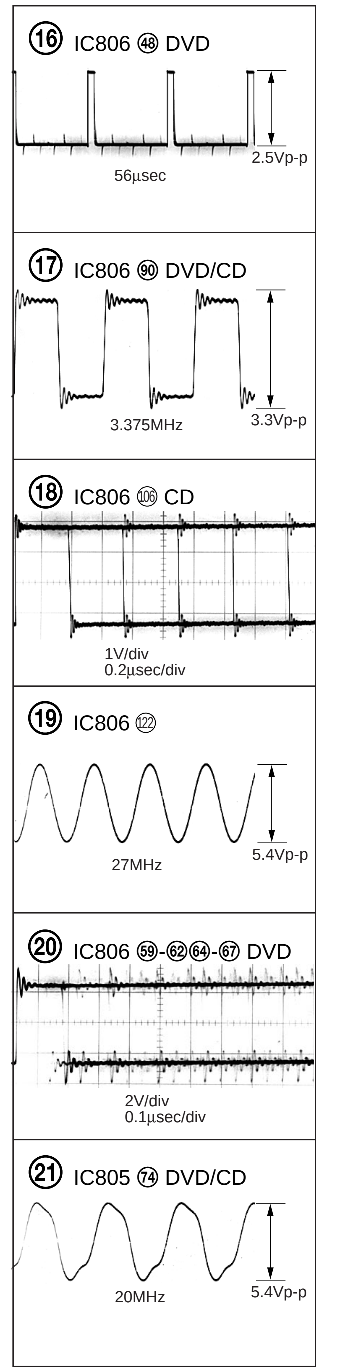

MB-78 (DIGITAL PROCESS 2) SCHEMATIC DIAGRAM

—Ref. No.: MB-78 Board; 1,000 Series—

• See page 4-13 for MB-78 BOARD printed wiring board.

FG-43 (SLED MOTOR), HP-98 (PHONES) PRINTED WIRING BOARDS AND SCHEMATIC DIAGRAMS
—Ref. No.: FG-43 Board, HP-98 Board; 2,000 Series—

There are few cases that the part printed on this diagram isn't mounted in this model.

FG-43 BOARD(SIDE B)

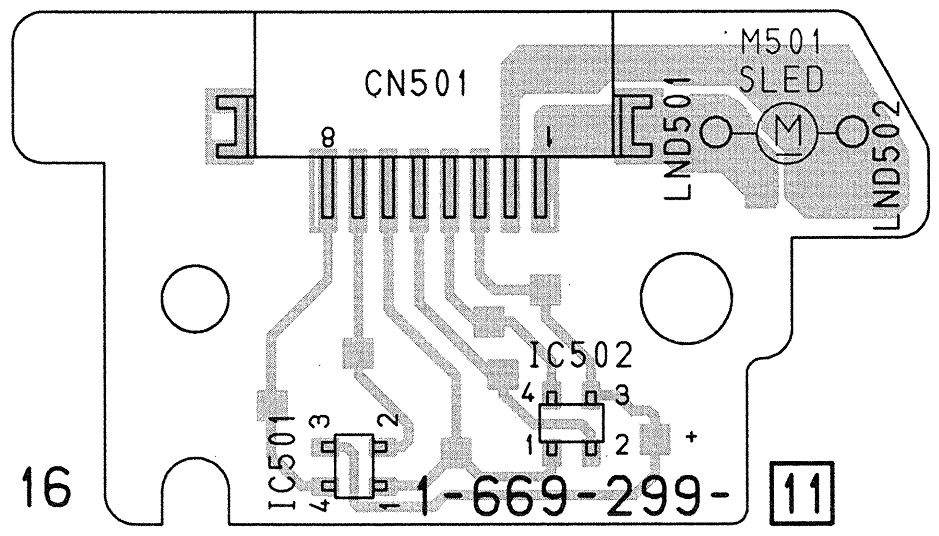

HP-98 BOARD (SIDE A)

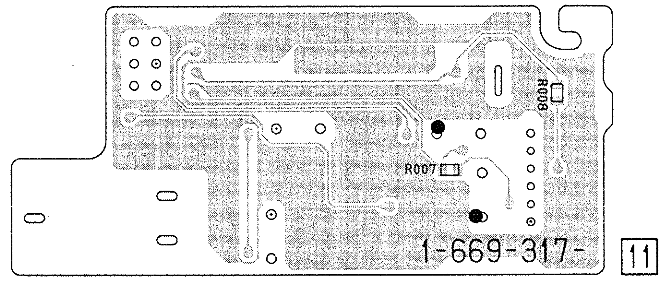

HP-98 BOARD (SIDE B)

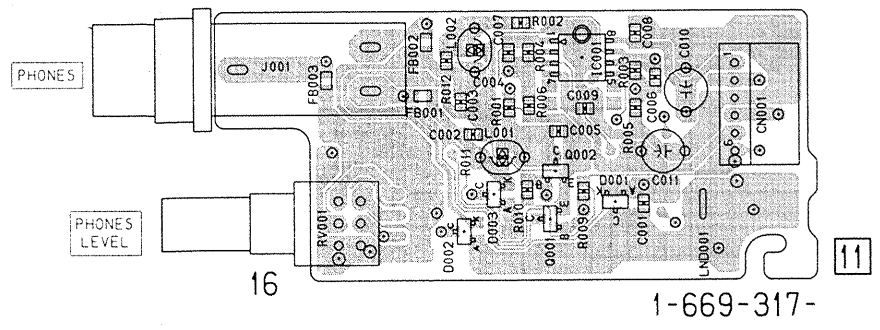

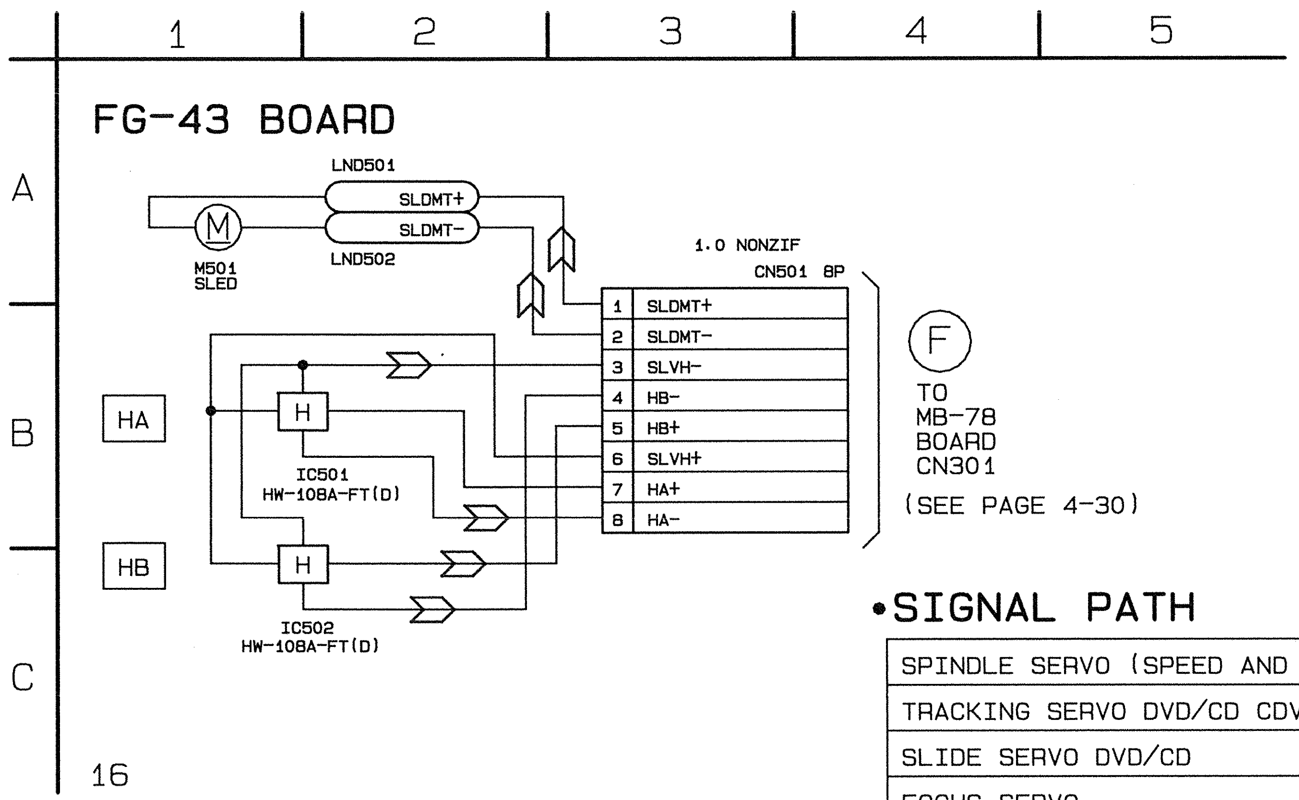

•SIGNAL PATH

SPINDLE SERVO (SPEED AND PHASE)	
TRACKING SERVO DVD/CD CDV	
SLIDE SERVO DVD/CD	⇒
FOCUS SERVO	
SKEW SERVO DVD/CD	

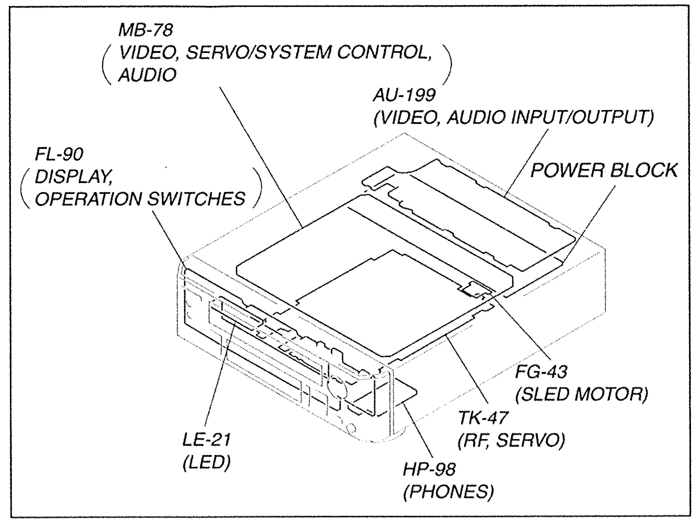

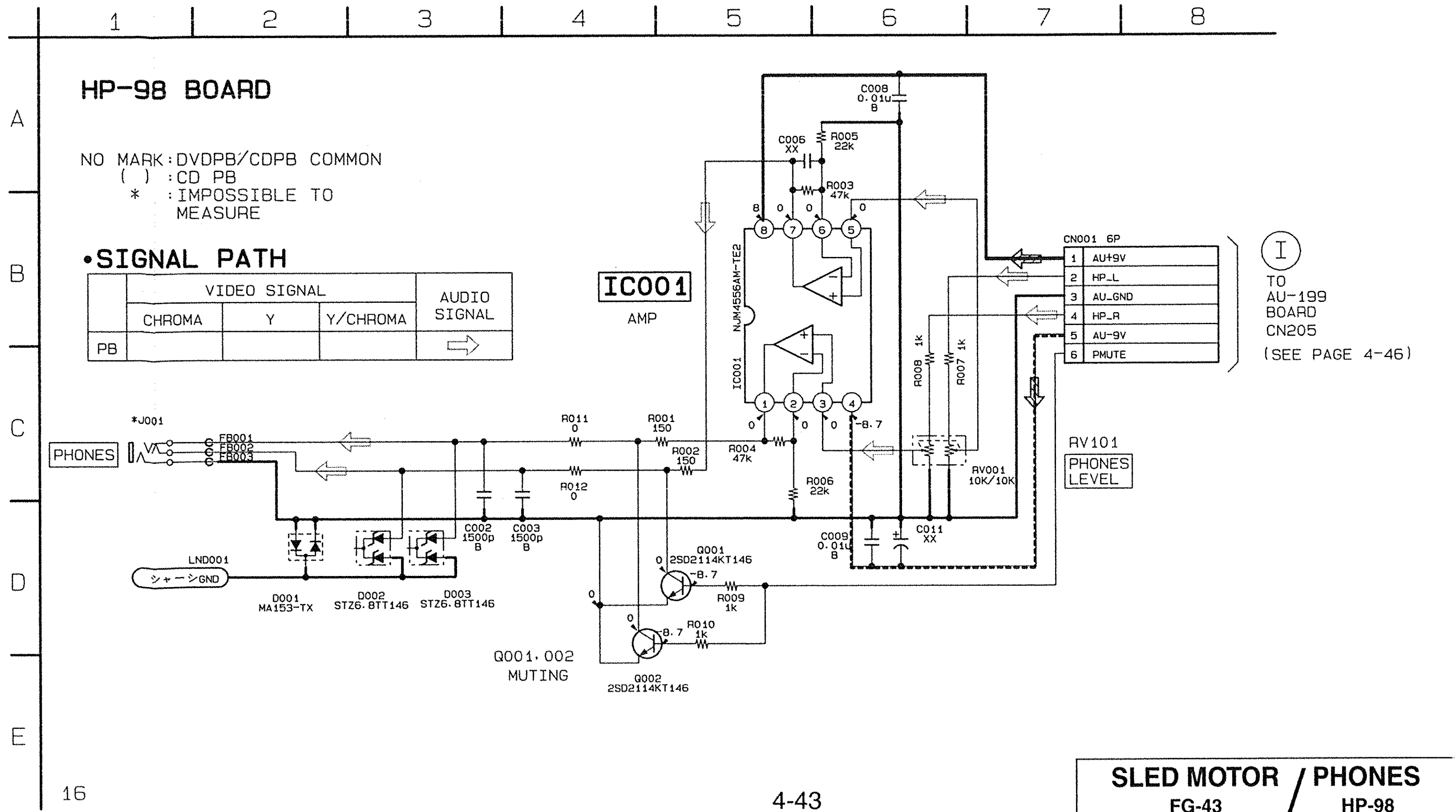

AU-199 (VIDEO/AUDIO INPUT/OUTPUT) SCHEMATIC DIAGRAM

—Ref. No.: AU-199 Board; 2,000 Series—

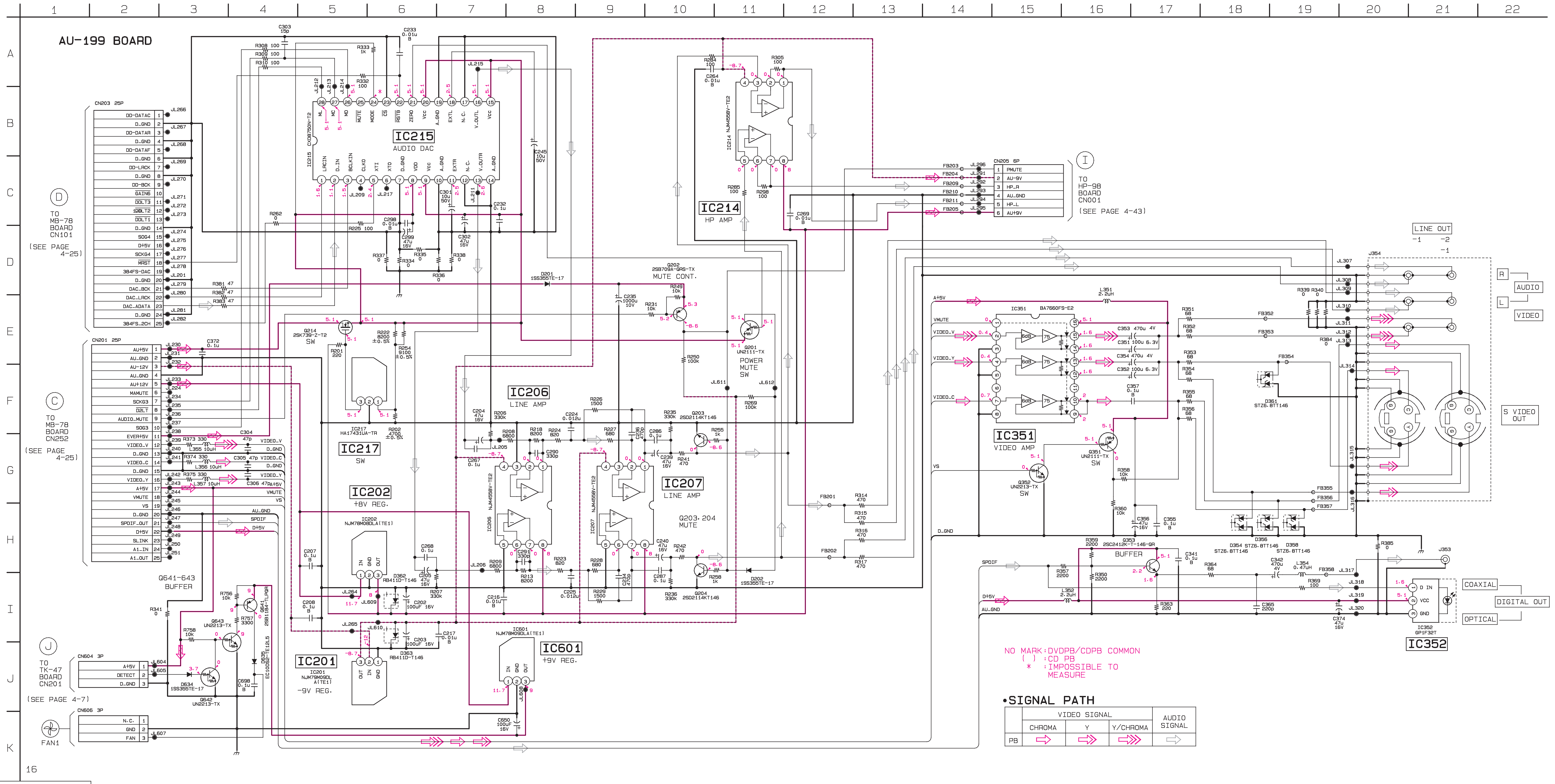

AU-199 (VIDEO/AUDIO INPUT/OUTPUT) PRINTED WIRING BOARD
—Ref. No.: AU-199 Board; 2,000 Series—

There are few cases that the part printed on this diagram isn't mounted in this model.

AU-199 BOARD (SIDE A)

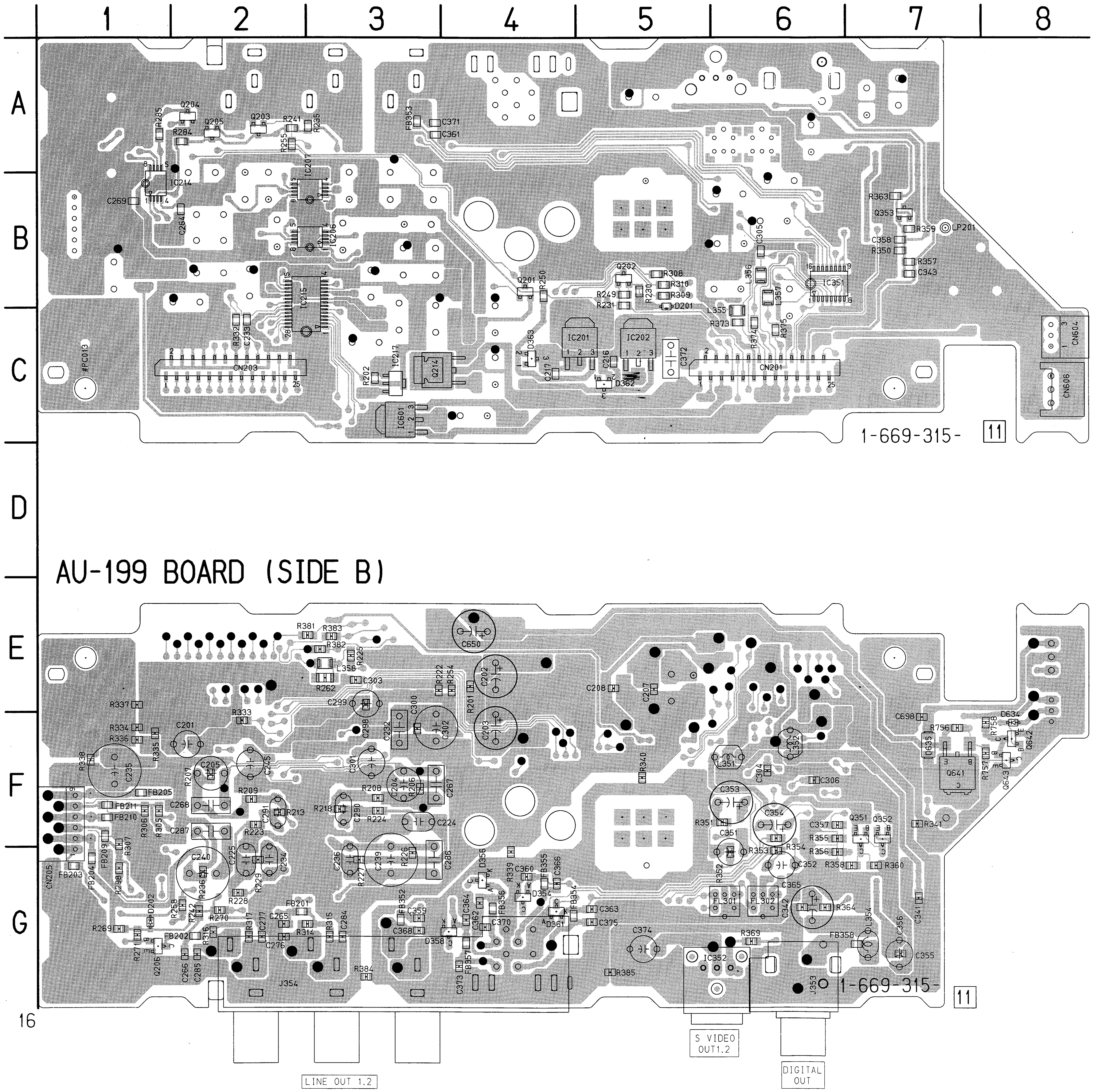

AU-199 BOARD

CN201	C-6	IC214	B-1
CN203	C-2	IC215	B-2
CN205	F-1	IC217	C-3
CN604	C-8	IC351	B-6
CN606	C-8	IC352	G-6
		IC601	C-3
D201	C-5		
D202	G-1	J353	G-6
D354	G-1	J354	G-3
D356	G-4		
D358	G-4	Q201	B-4
D361	G-4	Q202	B-5
D362	C-4	Q203	A-2
D363	C-5	Q204	A-2
D634	F-4	Q214	C-3
D635	F-8	Q351	F-7
		Q352	F-7
IC201	C-5	Q353	B-7
IC202	C-5	Q641	F-7
IC206	B-3	Q642	F-8
IC207	B-3	Q643	F-8

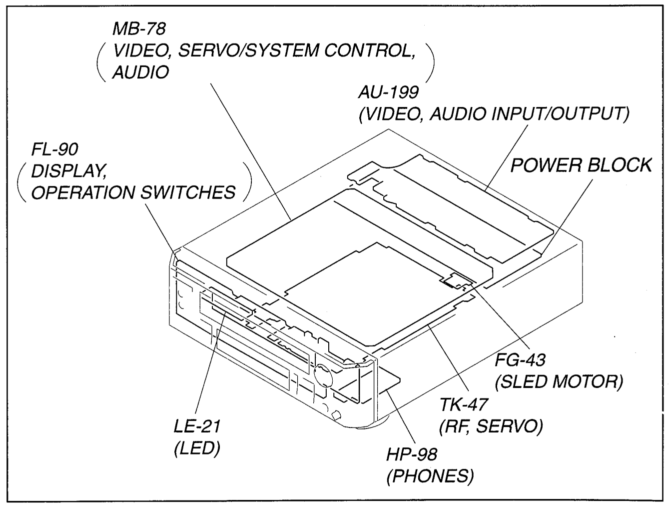

FL-90 (DISPLAY, OPERATION SWITCHES), LE-21 (LED) PRINTED WIRING BOARDS

—Ref. No.: FL-90 Board, LE-21 Board; 2,000 Series—

There are few cases that the part printed on this diagram isn't mounted in this model.

FL-90 BOARD

CN101	G-5
CN102	A-9
CN103	B-10
D106	G-10
D107	G-1
D108	B-9
D109	B-9
D110	B-9
D111	B-9
IC101	E-6
IC102	B-1
Q105	G-2
Q106	F-9
Q107	F-9

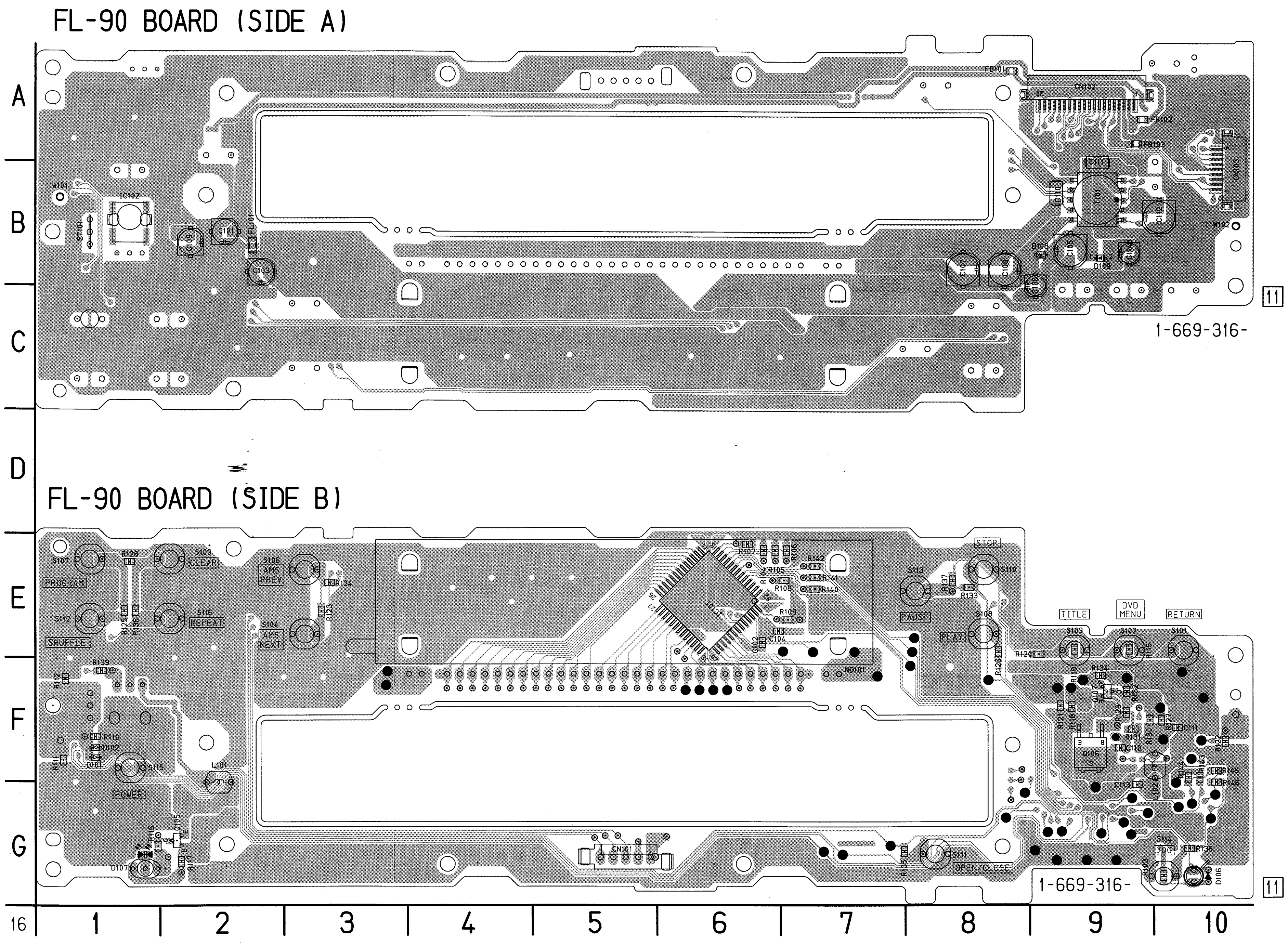

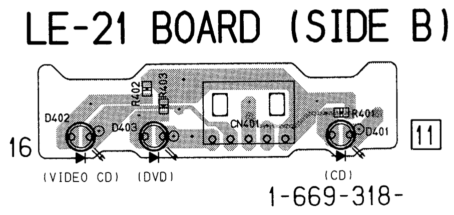

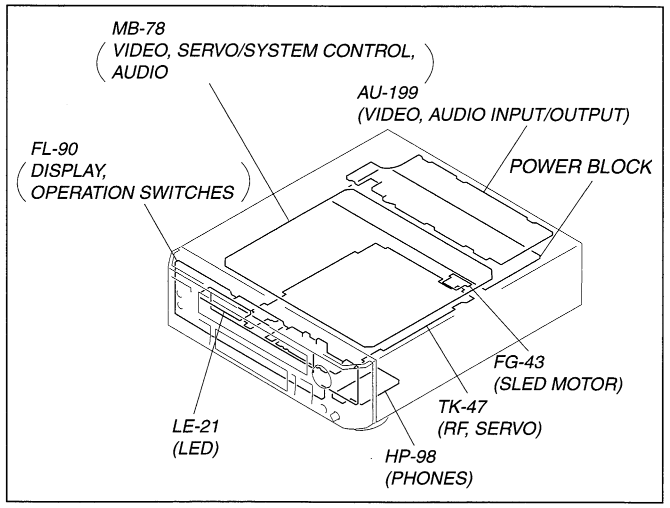

FL-90 (DISPLAY, OPERATION SWITCHES), LE-21 (LED) SCHEMATIC DIAGRAM

—Ref. No.: FL-90 Board, LE-21 Board; 2,000 Series—

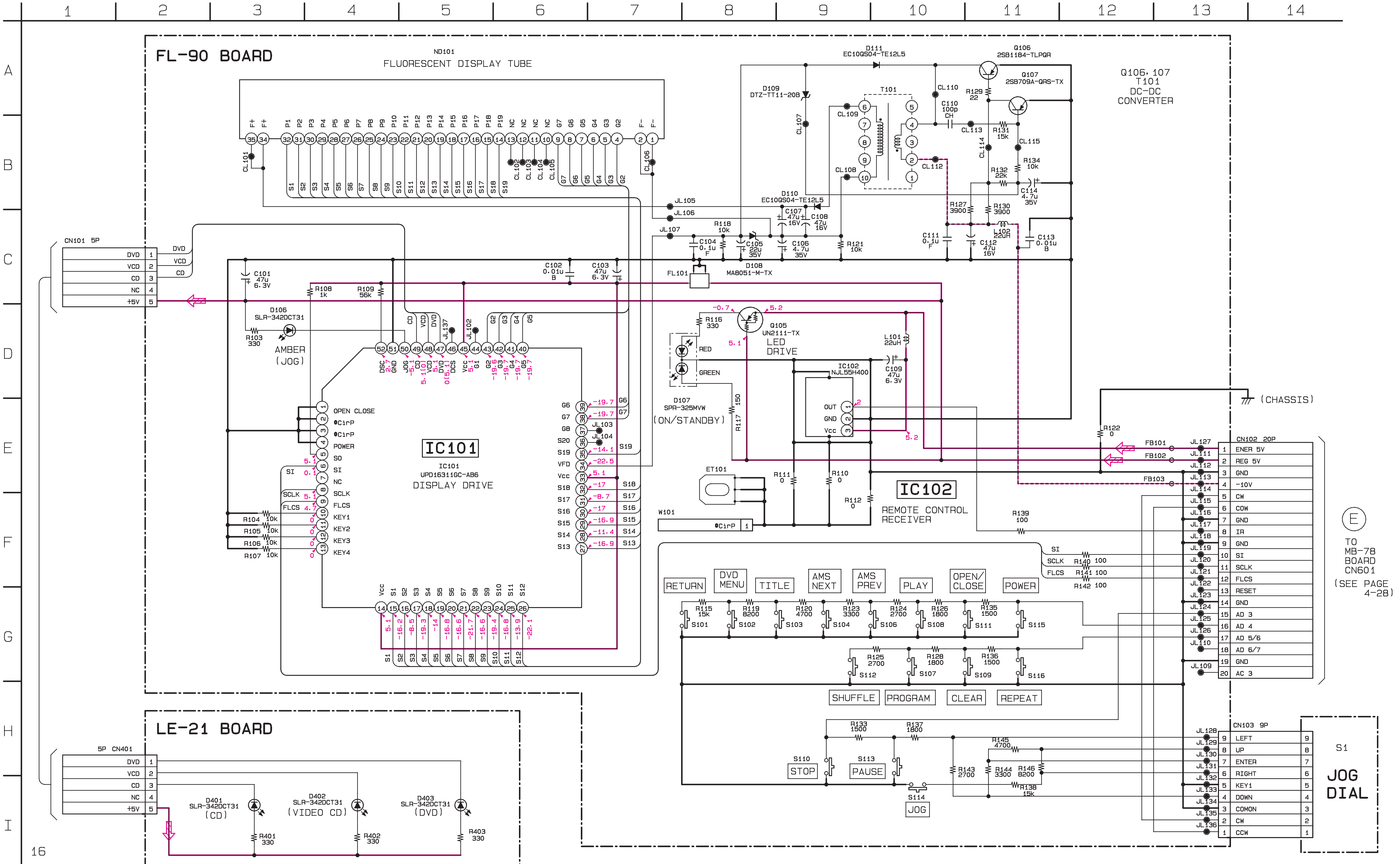

NO MARK : DVDPB/CDPB COMMON
( ) : CD PB
* : IMPOSSIBLE TO MEASURE

POWER BLOCK HS-930SH (SWITCHING REGULATOR) PRINTED WIRING BOARD

— Ref. No. HS-930SH Board; 8,000 Series —

EXCEPT E MODEL

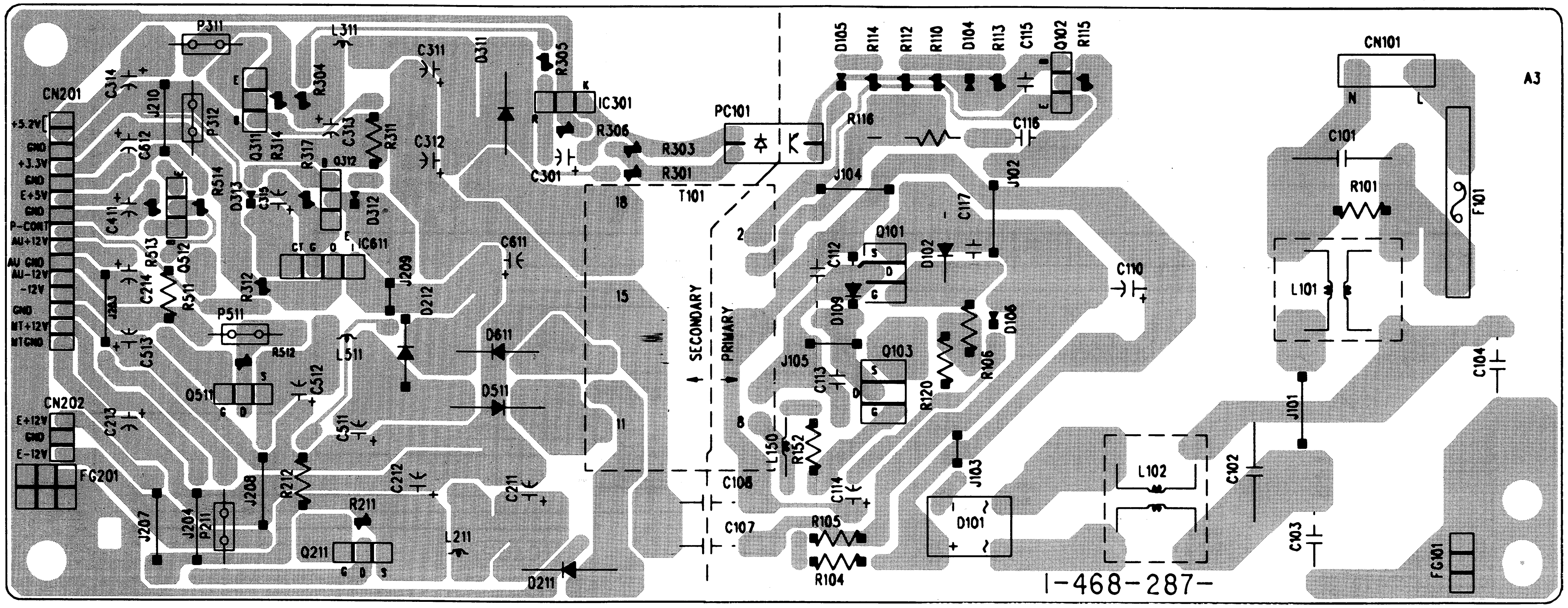

21

(21)

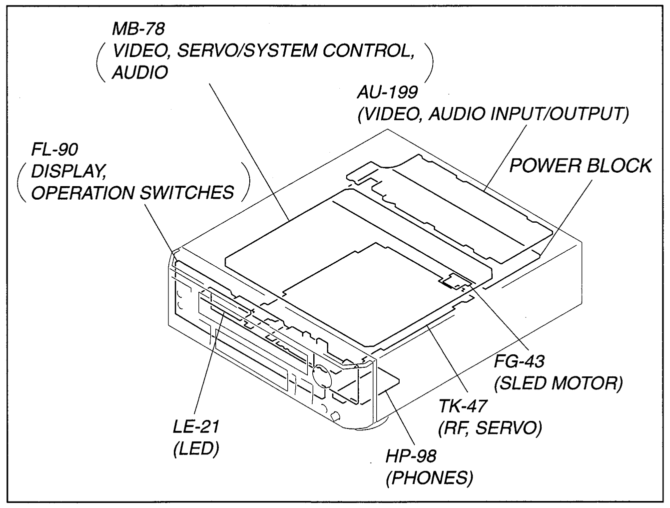

POWER BLOCK HS-930SH (SWITCHING REGULATOR) SCHEMATIC DIAGRAM
— Ref. No. HS-930SH Board; 8,000 Series —

EXCEPT E MODEL

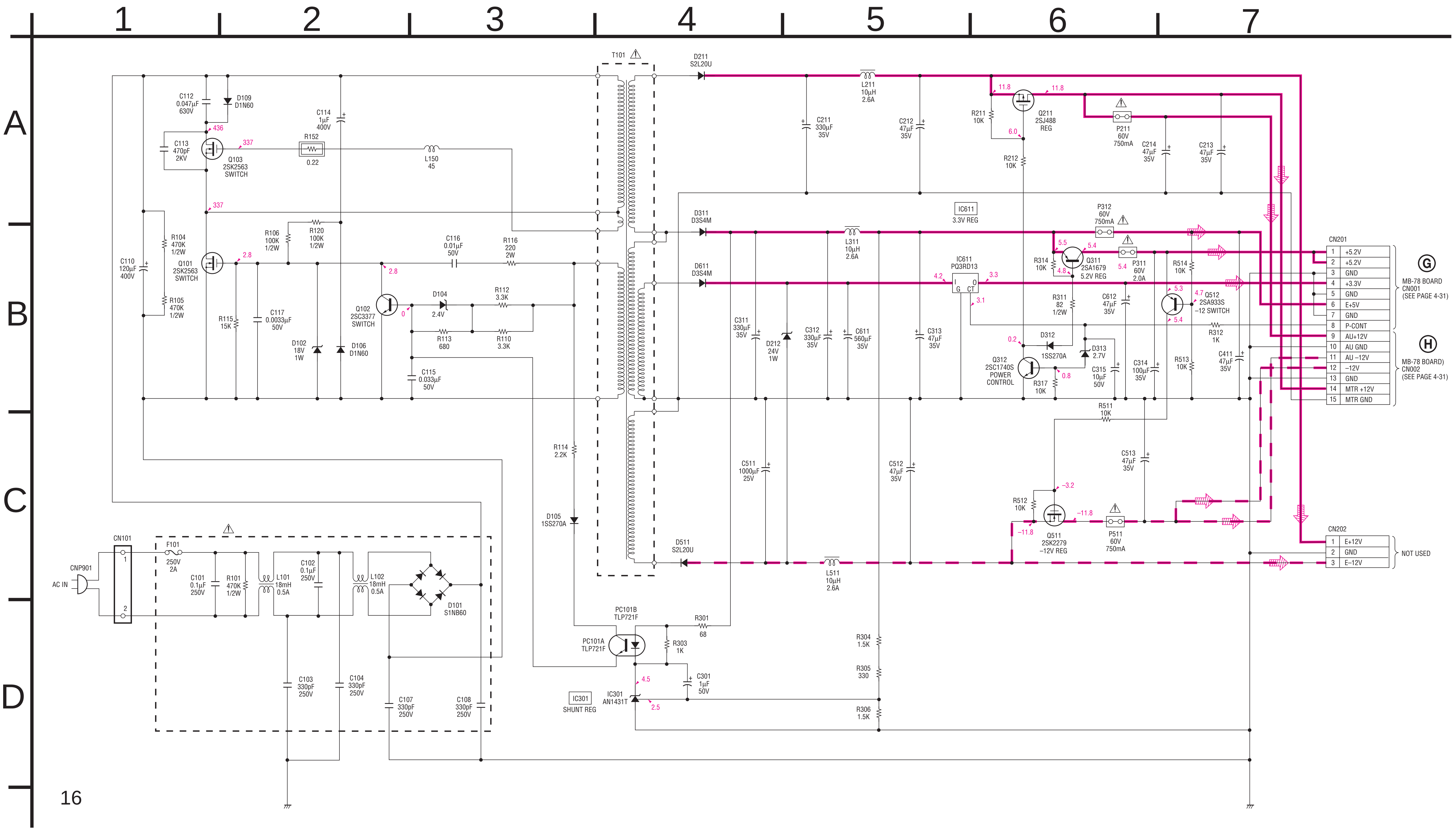

Note : The components identified by mark ⚠ or dotted line with mark ⚠ are critical for safety.
Replace only with part number specified.

SWITCHING REGULATOR
POWER BLOCK HS-930SH

POWER BLOCK HS-930SF (SWITCHING REGULATOR) PRINTED WIRING BOARD

— Ref. No. HS-930SH Board; 9,000 Series —

E MODEL

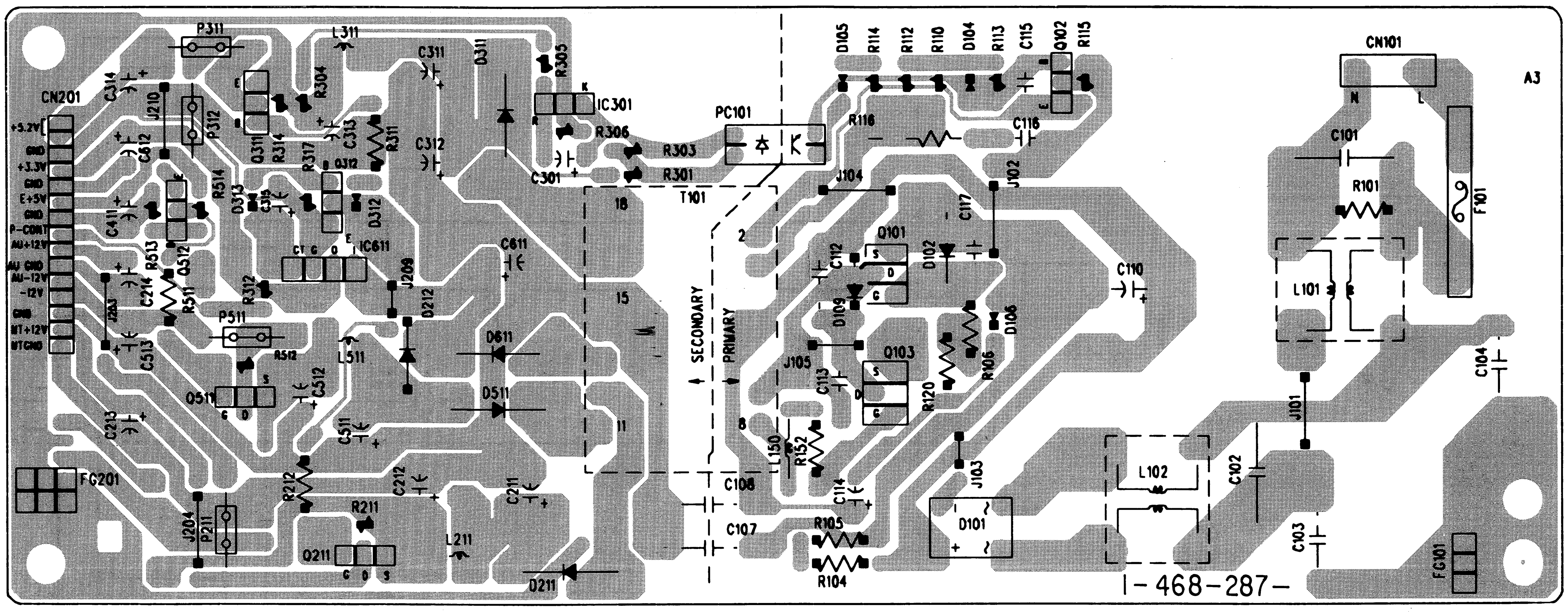

31
(31)

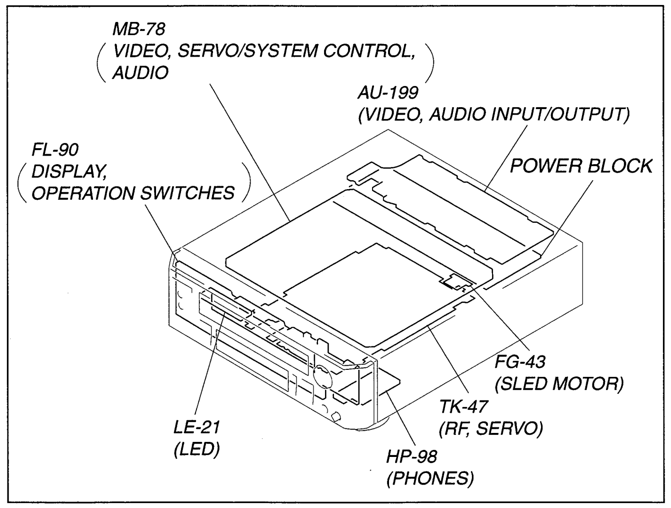

POWER BLOCK HS-930SF (SWITCHING REGULATOR) SCHEMATIC DIAGRAM
— Ref. No. HS-930SH Board; 9,000 Series —

E MODEL

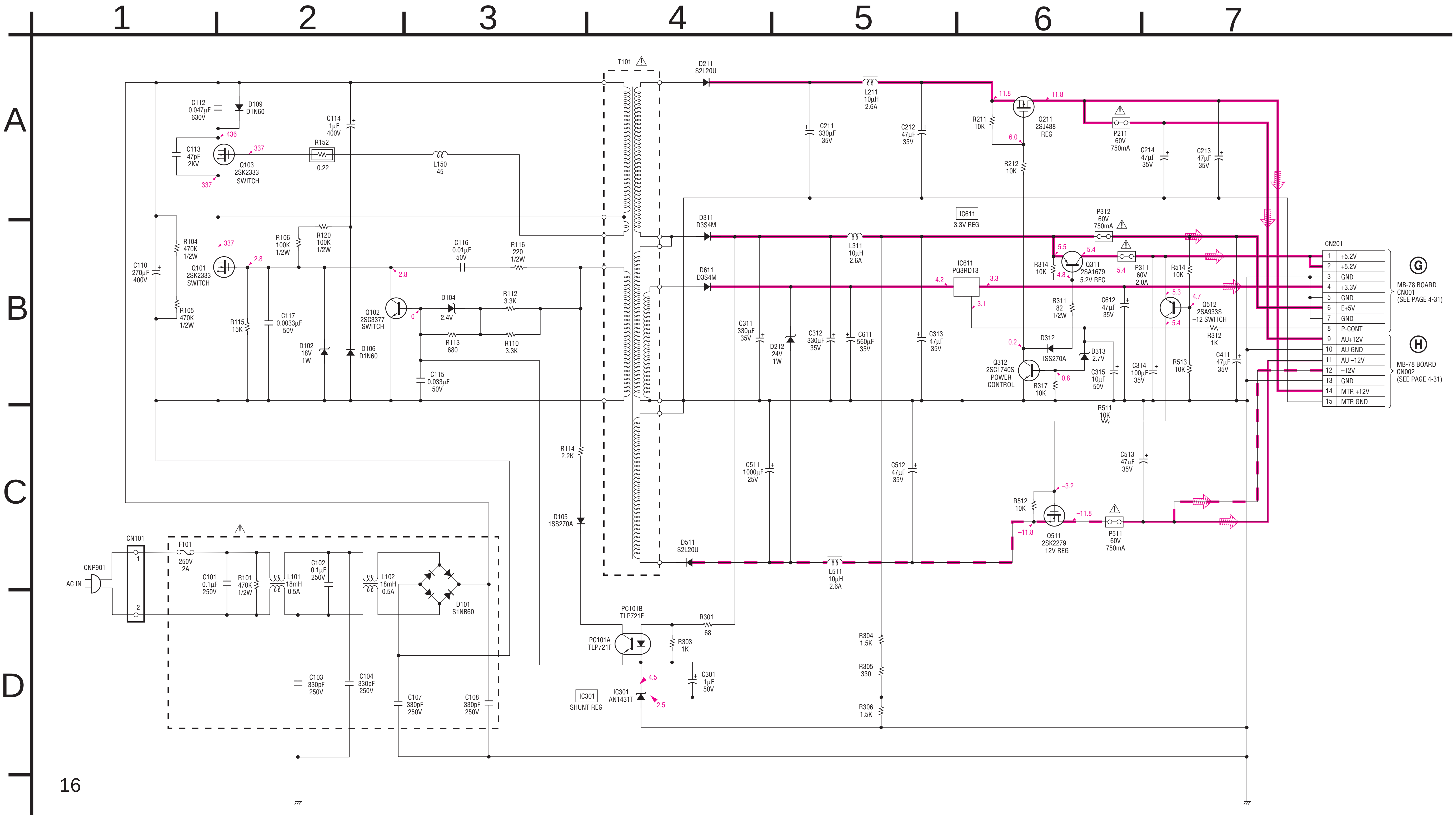

16

Note : The components identified by mark ⚠ or dotted line with mark ⚠ are critical for safety.
Replace only with part number specified.

SECTION 5
TEST MODE

5-1. How to Enter Test Mode

When main power of DVP-M35 is off, input [TITLE], [CLEAR] then [POWER] from remote commander to enter the test mode. The following menu appears on the video display. However, this message take some extra time to appear when it enter the test mode for the first time after the primary power is turned on, because the IF microprocessor calculates check-sums.

```
Test Mode Menu

0.Syscon Diagnosis
1.Drive Auto Adjustment
2.Drive Manual Operation
3.Mecha Aging
4.Emergency History
5.Other Checks

  Exit: POWER Key
```

In the test mode, all operations are performed from remote commander or from the operation panel using the keys.
To exit the test mode, press the [POWER] key in all modes except the middle of testing.

5-2. System Control Diagnosis

Press the [0] key while the initial menu is being displayed, and enter the diagnosis mode. The following display appears.
Use the adjustment remote commander RMT-D102E (1-475-686-31). (RMT-D101J (1-475-219-11/21) and RMT-D100E/U (1-475-086-31/51) can also be used.)

```
Syscon Diagnosis
 IF con Ver. 1. 220 (9315)
 SYScon Ver. 1. 000 (0000)

Model NO. DPX11????
** Press Remocon Key **


SIRCS:FF KEY:FF
```

← Version (check sum) of the IF microprocessor
← Version (check sum) of the SYS microprocessor
(Check sum of the SYS microprocessor is 0000 in the beginning.)
← Indicates the model code.

* Note: When the player enters the diagnosis mode, the RGB output of the Euro AV is turned off.
When a monitor TV is connected using the RGB connection, display of the monitor TV disappears.
Use an NTSC monitor for self diagnosis.
Items 8-9 to 8-13 of the self diagnosis check the. Euro AV output.

5-2-1. Selection of Check Items

The desired check item can be selected when Model No. is being displayed. When any numeric key is pressed, diagnosis of the selected item is performed. When any key other than the numeric key is pressed, all item test is selected.

5-2-1-1. Testing the Selected Item

The main menu is not displayed. Therefore, select any desired item number from the item list. Enter the four-digit selected number that consists of the two digits of the main item number and two digits of sub item number totaling the four digits, using numeric keys of the remote commander microprocessor. When the first digit is entered, the item selection submenu appears. Enter the remaining three digits, and press [ENTER]. When an item is selected, the detailed test is performed. When RAM test is selected, the selected RAM is tested twice after changing data of all addresses.

< Example > Select the item 2-2 ROM Check.
Input “0202” because the item number is <2-2>.

```
Syscon Diagnosis
 IF con Ver. 1. 220 (9315)
 SYScon Ver. 1. 000 (0000)

Select Diag No. ; 0 -

** Press Remocon Key **


SIRCS:FF KEY:FF
```

← Enter item number [0]

```
Syscon Diagnosis
 IF con Ver. 1. 220 (9315)
 SYScon Ver. 1. 000 (0000)

Select Diag No. ; 02 -

** Press Remocon Key **


SIRCS:FF KEY:FF
```

← Enter item number [02]

```
Syscon Diagnosis
 IF con Ver. 1. 220 (9315)
 SYScon Ver. 1. 000 (0000)

Select Sub No.  ; 02-0

** Press Remocon Key **


SIRCS:FF KEY:FF
```

← Enter item number [020]

```
Syscon Diagnosis
 IF con Ver. 1. 220 (9315)
 SYScon Ver. 1. 000 (0000)


Select Sub No.  ; 02-02

** Press Remocon Key **


SIRCS:FF KEY:FF
```

← Enter item number [0202]

When an wrong item number is entered by mistake, it can be cleared by pressing the [CLEAR] key. When [CLEAR] is pressed, the selected number is cleared. Enter a correct number. When [ENTER] is pressed, diagnosis of the selected number only is executed and its result appears.

When any key is pressed while the diagnosis result is flashing, the system returns to the initial display of the self diagnosis. When the diagnosis which needs visual check such as STILL picture check, or when errors occur, press the [PREV] key to repeat checking. Press [NEXT] to advance to the next step.
If self diagnosis of the selected number does not exist, the system returns to the initial display when [ENTER] is pressed.

5-2-1-2. Testing All Items

When any key other than the numeric keys is pressed while Model No. is being displayed, testing of all items is selected.
"Testing All Items" is the simple check omitting the RAM check. In practice, the selected blocks only are tested at interval such as 0-ff, 500-5ff, a00-aff, f00-fff, 1400-14ff, ...(address). Test is executed sequentially from the top of the check item list of the diagnosis. If errors which require visual inspection, do not occur, the system advances to the next test step. W hen errors occur, press the [PREV] key to repeat checking. When errors occur or confirmation is necessary, press the [PREV] key to repeat checking of the specified item. Press [NEXT] to advance to the next step.

5-2-2. Error Display

When errors occur, error code and information are displayed as follows.

```
Syscon Diagnosis
 IF con Ver. 1. 220 (9315)
 SYScon Ver. 1. 000 (62ED)

RAM Check
 Error code: 05
 Address   : 01001D87
 Write Data: 20
 Read  Data: FF

SIRCS:FF KEY:FF
```

← Name of check item
← Error code
← Error occurring address
← Write data (2 to 8 digits)
← Read data (2 to 8 digits)

When error code is other than "05" (Write data and read data do not agree.), the address column and the data column are set to 0.

When all steps of test have completed or the test is suspended, the message "Diag OK" or "Diag Error End" flashes. Press any to return to the initial menu of the test mode.

5-2-3. Diagnosis Check Item List

* The item number (1) and the item number (x-1) means all item check.

(2) Memory
- (2-2) ROM check
- (2-3) RAM check (DMA is used)

(3) Destination setting
- (3-2) Destination setting check

(4) Gate array (62000CFh: Peripheral Access Control)
- (4-2) Register
- (4-3) Reset line

(5) Drive block
- (5-2) EPROM (serial)
- (5-3) SSI (serial)
- (5-4) Servo DSP download
- (5-5) Servo DSP register
- (5-6) Servo DSP reset line

(6) Data supply block
- (6-2) ARP register
- (6-3) ARP reset line
- (6-4) ARP DRAM
- (6-5) ARP interrupt line
- (6-6) Decrypt IC register
- (6-7) Decrypt IC reset
- (6-8) Decrypt IC interrupt line
- (6-9) Reserve data top byte read

(7) AV decoder
- (7-2) 64020/64021 register
- (7-3) 64020/64021 reset line
- (7-4) 64020/64021 DREQ signal line
- (7-5) 64020/64021 DRAM
- (7-6) Connection from ARP to 64020/64021
- (7-7) 64020/64021 interrupt line
- (7-8) AV decoder revision check

(8) Video consumer related items
- (8-2) 1914 (serial)
- (8-3) 1914 Read
- (8-4) 1914 Vertical sync
- (8-5) Still picture output (Direct write into DRAM)
- (8-6) Still picture output (Through ARP)
- (8-7) DNR (serial)
- (8-8) S-terminal DC check
- (8-9) EURO-AV output check (EURO model only)
- (8-10) Y/C output check (EURO model only)
- (8-11) RGB output check (EURO model only)
- (8-12) AV CONT Wide Mode check (EURO model only)
- (8-13) AV CONT Through check (EURO model only)

(9) Audio related items
- (9-2) Sampling frequency: 44.1 kHz
- (9-3) Sampling frequency: 48 kHz
- (9-4) Sampling frequency: 96 kHz
- (9-5) Audio digital output
- (9-6) Audio digital mute
- (9-7) MPEG audio analog output
- (9-8) Dual DAC (serial)
- (9-9) Audio mute line
- (9-10) MGA 16-bit→24-bit conversion (DD, KARAOKE models only)
- (9-11) MGA - DCS selector switch check (DD model only)
- (9-12) MGA - KARAOKE selector switch check (KARAOKE model only)

(10) AC-3 related items [The supported models only]
- (10-2) AC-3 DSP register (DD model only)
- (10-3) AC-3 DSP Reset line (DD model only)
- (10-4) AC-3 DSP download (serial) (DD model only)
- (10-5) AC-3 DSP SRAM check (DD model only)
- (10-6) AC-3 DSP test tone (DD model only)
- (10-7) AC-3 audio output (DD model only)
- (10-8) Analog gain switch check (DD model only)
- (10-9) AC-3 DAC (serial) (DD model only)
- (10-10) AC-3 to 2 ch (DCS path) (DD model only)

(11) KARAOKE related items [The supported models only]
- (11-2) KARAOKE DSP register (KARAOKE model only)
- (11-3) KARAOKE DSP Reset line (KARAOKE model only)
- (11-4) KARAOKE DSP (serial) (KARAOKE model only)
- (11-5) Sound effect IC (KARAOKE model only)
- (11-6) KARAOKE AC-3 (KARAOKE model only)

5-2-4. Brief Description of Check Procedures

The diagnostic check procedures of each item are briefly describes in the order of menu.

(2) Memory
(2-2) ROM check
Checksum calculation
Error: Error is not detected.

8-bit data is added to the respective addresses of ROM starting from 0x00000 to 0xfffff. Result of the calculation is displayed in hexadecimal number using 4 digits. Error is not detected. Compare the calculated values with the default values.

(2-3) RAM check (DMA is used)
ROM→RAM check (DMA): Check if read/write data agree.
Error 05: Write and read data do not agree.

Data of external RAM of SH is saved to stack in units of 256 bytes. After transferring the ROM data to DMA, the ROM data is read out from DMA and compared with the ROM data in units of one byte. When the more detailed check is selected, the read-out data is bit-inverted which is written and checked again.
During when checking is being performed, all interrupts are stopped. In addition to it, the variables use stack only including saving area and bit inversion buffer. Because all processings are performed within this function, DAM is used for all processings including data transfer with the stack area. When the more detailed check is selected, all areas are checked twice using the inverted data.
However, when one block is checked, the succeeding four blocks are not checked in the simple check. The check using the inverted data, is also not performed in the simple check. If write data and read data do not agree., check can be repeated.

(3) Destination setting
(3-2) Destination setting check
I/O port reading
Error: Error is not detected.

Data of the destination setting port (I/O) is read and displayed in hexadecimal number.
Error is not detected

(4) Gate array (62000CFh: Peripheral Access Control)
(4-2) Register
Data write→Data read Check if data agrees
Error 05: Write data and read data do not agree.

Register (Peripheral Access Control) of adrs = 62000CFh
The “Data write-then-read agreement check” is performed. If write and read data do not agree., check can be repeated.

(4-3) Reset line
Data write→Resetting hardware→Data read
Error 02: Reset error

Data 0xff is written into the register (Peripheral Access Control) of adrs = 62000CFh. Then check to see that the register is initialized to “0x00” by reset pulse.

(5) Drive block

(5-2) EEPROM (serial)

Data write→Data read and check if data agree

Error 05: Write data and read data do not agree.
11: Serial transfer error
12: EEPROM does not become ready.

16-bit data is written into address 0 of EEPROM. Then the “Data write-then-read agreement check” is performed.
Prior to this check, content of the address 0 is read to be saved. If data cannot be read at this time, error is displayed and the data is not written. This diagnosis uses a 16-bit data for this check. The 16 different patterns of data that are generated by shifting all data to the left by one bit starting from 0x0001, are written into EEPROM.
If write data and read data do not agree, check can be repeated. Once the “Data write-then-read agreement check” is started, and if error occurs during this check, the data is saved before exiting from this test, but data is not guaranteed to be written correctly or not.

(5-3) SSI (serial)

Write into serial register→Read from register and check if data agree

Error 05: Write data and read data do not agree.
33: SSI Serial transfer error

Write data of 0x00 to 0xff to the FCCR register of SSI. The “Data write-then-read agreement check” is performed.
If write data and read data do not agree., check can be repeated.

(5-4) Servo DSP downloading

ROM/RAM identification of the DSP code area
RAM version: Program downloading→Revision data
ROM version: Revision data reading

Error 04: Data read error
13: DSP Data Ready cannot be not set.

In the masked-ROM version, data downloading cannot be executed. Perform the data downloading in the ROM version only. ROM or RAM is identified using the DBUSY signal of DSP. The unique downloading flat is prepared in this diagnosis.
This flat is 0 when data is not downloaded, and is 1 when already downloaded. Error is as follows. Download error: 2
Firstly, hardware reset is performed and either ROM or RAM is identified from the status of the DBUSY signal. In the case of RAM, the servo control code is downloaded. When error is not detected, version number is read from address 200 and is displayed.
In the case of ROM, version number is read from address 200 and is displayed. Compare the displayed value with the default value.
Display is as follows:
In the case of RAM: “DSP download Rev. = xxxx”
In the case of ROM: “DSP Mask ROM Rev. = xxxx”

(5-5) Servo DSP register

(Program downloading→) Data write→Data read and check if data agree

Error 04: Data read error
05: Write data and read data do not agree.
13: Data Ready cannot be not set.
14: DSP download error

Check the downloading flag. If it is 0, download the program. However, downloading is not performed in the ROM version. If download error does not occur, its content of the DSP address 200h is read and saved, then check starts.
Check is performed by writing then reading the 16 different patterns of data that are generated by shifting all data by one bit to the left starting from 0x0001. If write data and read data do not agree, check can be repeated.

(5-6) Servo DSP reset line
Write into register→Resetting hardware→Read from register
Error 02: Reset error
13: Data Ready cannot be not set.
14: DSP download error

When testing the RAM version, confirm that the register can no more be read once the register is reset. When download error is not detected, content of the DSP address 200h, is read. After resetting the hardware, the same content is read again so that the data are compared. If any data cannot be read, or if the two data does not agree, result of this test is OK. When the data before hardware reset and after the reset is the same, the reset error is output. In the ROM version, it is confirmed that value of version is initialized by hardware reset. After reading the version value, its complement value is written. If the read-out value is the same as the written value, the reset error is output.

(6) Data supply block
(6-2) ARP register
Write data into register→Read data from register and check if data agree
Error 05: Write data and read data do not agree.

Using the value of "0x00" to "0xff", the 12 registers that can write and read data in all bits, are tested with "Data write-then-read agreement check". If write data and read data do not agree, check can be repeated.

(6-3) ARP reset line
Write into register→Resetting hardware→Read from register
Error 02: Reset error
05: Write data and read data do not agree.

The test is performed in the way that the data "0xfe" is written in the INTEN3 register, then the data is checked if the INTEN3 register is initialized to "0x00" by the reset pulse signal. In addition to it, the read-data agreement check is performed for confirmation.

(6-4) ARP DRAM
ROM Data→ARP→DRAM→ARP reading, and check if data agrees.
Error 03: Data write error (ARP cannot be set into Write Enable.)
04: Data read error (ARP cannot be set into Read Enable.)
05: Write data and read data do not agree.

In this test, the ROM pattern is copied to the entire area to be checked. During this copying, address of the copy source (ROM) is returned by 254 bytes after every copying of 256 bytes. When the detailed check mode is selected, the same check is repeated in order to test all bits using the inverted data after the entire area has been checked.. The bus width of ARP is 16 bits. This check program shows address in units of bit. By means of reading after writing data in the entire area, the overwriting by shadow can be checked.
In the detailed check mode, the entire area is checked twice using the inverted data. In the simple check mode, when one block is checked, the succeeding four blocks are not checked. If write data and read data do not agree., check can be repeated.

(6-5) ARP interrupt line
Data transfer request→Interrupt from ARP that data transfer has ended.
Error 21: ARP interrupt is not detected.

The AC-3 audio data that is stored in ROM is transferred to ARP. The interrupt that data output from the specified sector of ARP has ended, is detected. Because interrupt from Decrypt is supplied using the same interrupt line, the interrupts from Decrypt are all masked.

(6-6) Decrypt IC register
Write into register→Read from register and check if data agree
Error 05: Write data and read data do not agree.

The interrupt mask register is checked using the value of 0x00 to 0xfc (the lower two bits are masked) with the "Data write-then-read agreement check" If write data and read data do not agree., check can be repeated.

(6-7) Decrypt IC reset
Write into register→Resetting hardware→Read from register
Error 02: Reset error
05: Write data and read data do not agree.

The test is performed in the way that, after writing “0xfc” to the interrupt mask register, the registered is check if it is initialized to “0x00” by the reset pulse signal. In addition to it, the read-data agreement check is performed for confirmation before reset.

(6-8) Decrypt IC interrupt line
ROM→ARP→Decrypt
Error 22: Decrypt interrupt is not detected.

The AC-3 audio data that is stored in ROM is transferred through ARP, and the reserve data interrupt from Decrypt is detected. Because interrupt from Decrypt is supplied using the same interrupt line, the interrupts from Decrypt are all masked in order to identify these interrupts.

(6-9) Reserve data top byte read
ROM→ARP→Decrypt Reserve data top byte read agreement check
Error 05: Write data and read data do not agree.
22: Decrypt interrupt is not detected.

The AC-3 audio data that is stored in ROM is transferred through ARP, and the top byte of the reserve data is read from the Decrypt register. In the lower 4 bits at the top of the reserve data of the first 5 sectors of this audio data, the data of ‘0’, ’1’, ’2’, ’3’, ’4’ has already been written for this check. This data is checked if the read-out data agree with this data at every interrupt into the respective sectors. If write data and read data do not agree., check can be repeated.

(7) AV decoder
(7-2) 64020/64021 register
Write into register→Read from register and check if data agree
Error 05: Write data and read data do not agree.

The 51 registers that can write and read data in all bits are tested using the value of “0x00” to “0xff” with the “Data write-then-read agreement check”. If write data and read data do not agree., check can be repeated.

(7-3) 64020/64021 reset line
Write into register→Resetting hardware→Read from register
Error 02: Reset error
05: Write data and read data do not agree.

The Capture/Compare microprocessor control register is tested by writing “0xff” into its register 0 and checks if the register is initialized to “0xff” by the reset pulse. In addition to it, the read-data agreement check is performed for confirmation before reset.

(7-4) 64020/64021 DREQ signal line
AVD DMA check
Error 03: Data write error
04: Data read error
05: Write data and read data do not agree.
06: DMA transfer DREQ error
07: DMA transfer address error

Connection of the DREQ signal line is check by the DMA transfer with the AV decoder. When error is not detected§the transferred data and the DRAM data that is read from the register are compared.

(7-5) 64020/64021 DRAM
ROM data→AVD→DRAM→AVD read-out then agreement check
Error 03: Data write error
04: Data read error
05: Write data and read data do not agree.
06: DMA transfer DREQ error
07: DMA transfer address error

In this test, the ROM pattern is copied to the entire area to be checked. During this copying, address of the copy source (ROM) is returned by 254 bytes after every copying of 256 bytes. When the detailed check mode is selected, the same check is repeated in order to test all bits using the inverted data. DMA is used for writing and reading.
The bus width of AVS decoder is 64 bits, however it is displayed in units of 8 bits. In other words, please note that the actual address is 1/8 of the display value, and the lower 3 bits shows position of byte. By means of reading after writing data in the entire area, the overwriting by shadow can be checked . In the detailed check mode, the entire area is checked twice using the inverted data. In the simple check mode, when one block is checked, the succeeding four blocks are not checked.
If write data and read data do not agree., check can be repeated.

(7-6) Connection from ARP to 64020/64021
ROM Data→ARP→Decrypt→AVD
Error 04: Data read error
05: Write data and read data do not agree.
06: DMA transfer DREQ error
07: DMA transfer address error
10: Data transfer error between chips

This check is performed as follows. The AC-3 audio data that is stored in ROM, is written first. Check if the data is transferred to the AV decoder. If the transfer error is not detected, the target address of AV decoder to which the transfer data is written. A part of the data that is transferred to the AV decoder is sent to the SH RAM using DMA and is compared with the ROM data.

(7-7) 64020/64021 interrupt line
AVD DRAM→(DMA copy) AVD DRAM separate area
Error 31: AVS decoder interrupt is not detected.

The interrupt showing the end of transfer, which is generated by copying the AVS decoder DRAM data to the other area using DMA copy, is detected for this test.

(7-8) AV decoder revision check
Read from register
Error: Error is not detected.

The revision number of the AV decoder is read and displayed. The following displays appear depending upon the modes.

	RS232C Line	RS232C Rough, Fine & Remote microprocessor
L64020 Rev.?	1 020?	AVD Rev. = L64020?
L64020 Rev.G	1 0204	AVD Rev. = L64020G
L64021 Rev.A	1 0210	AVD Rev. = L64021A
L64021 Rev.?	1 021?	AVD Rev. = L64021?

* The register is a 8-bit register. When the line check is performed, 0200h is added to the read-out value. In other checks, it is replaced by '0G' when the read-out value is '04', and is replaced by '1A' when the read-out value is '10', and the character string is output following 'L6402'. When the register value of the new version is fixed, the character string could be replaced.

(8) Video consumer related items

(8-2) 1914 (serial)
Color bar output from NTSC encoder. (Color bar enable command)
Error 11: Serial transfer error

The test is set to start up the serial communication to NTSC encoder with the V sync interrupt so that the color bar enable command is transferred to 1914. The V sync interrupt and the internal serial 1 interrupt are used. When error is not detected, a message is output which prompts key input. Check the color bar output.

(8-3) 1914 Read
ID read→Agreement check with the default value.
Error 40: 1914 ID error

The device ID of 1914 is read. Error is issued when the read-out value is not “1914 (hex)”.

(8-4) 1914 Vertical sync
Measure the 1914 V Sync interrupt cycle with CPU.
Error 41: V sync interrupt is not detected.
42: V sync interrupt cycle error

Number of interrupt of every 200 ms is counted. If number of interrupt is in the range of 11 to 13, it is judged OK. It must be exactly 12, but error within the range of ±1 is allowed.

(8-5) Still picture output (Direct write into DRAM)
Pattern data→AVD→Video Out
Error 31: AV decoder interrupt (DMA transfer) is not detected.

This test is performed as follows. The pattern is written directly to the SDRAM of AV decoder and checks the picture display. Firstly, pattern data equivalent to one screen is written while changing the luminance signal data every pixel. The color difference signals of Cr and Cb are set to 80h which is B/W signal, and turn the display to on. Then the color difference signals are written while changing data every line. Because both of luminance and color difference signals are the regular pattern, the processing speed is increased by transferring the repetition data by DMA. When the detailed check mode is selected, the color difference signals that are written in the areas outside display area, are copied by the DMA transfer and the display colors are changed one after another. When error is not detected, a message is output which prompts key input. Check the pattern output.

(8-6) Still picture output (Through ARP)
ROM picture data→ARP→AVD→Video Out
Error 10: Data transfer error between chips

ROM data is transferred to AV decoder through ARP and the display picture is checked. When error is not detected, a message is output which prompts key input. The output picture is same as the startup picture.

(8-7) DNR (serial)
ROM picture data→ARP→AVD→DNR→Video Out (Outline)
Error 10: Data transfer error between chips

The picture is checked by transferring the special command of diagnostics to the output still picture. When error is not detected, a message is output which prompts key input. This check is performed in the machines in which DNR is installed. Output picture that is the same as (8-6) Still picture output is used. When DNR works effectively, color changes significantly.
In the models in which DNR is not installed, error code 0 is returned.

(8-8) S-terminal DC check
Color bar output from NTSC encoder
Error 11: Serial transfer error

Color bar is output in the same way as described in (8-2). Color bar is turned off after repeating on/off of the VS signal twice.

(8-9) EURO-AV output check (EURO model only)
Color bar output from NTSC encoder
ROM audio data→ARP→AVD→2 ch DAC→Analog Audio Out
Error 11: Serial transfer error
10: Data transfer from ARP→AV Decoder cannot be executed.
35: 2 ch DAC serial transfer interrupt is not detected.
37: PLL DAC serial transfer interrupt is not detected.

Video and audio output are checked by setting the AV-CONT: “H” and E-V/Y: “H”, E-V/RGB: “H”. As to video, color bar is output in the same way as (8-2). As to audio, the MPEG audio of the ROM data is output in the same way as (9-7).

(8-10) Y/C output check(EURO model only)
Color bar output from NTSC encoder
Error 11: Serial transfer error

As to video, video signal is output by setting the AV-CONT: “H”, E-V/Y: “L” and E-V/RGB: “H”. Color bar is output in the same way as (8-2).

(8-11) RGB output check (EURO model only)
Color bar output from NTSC encoder
Error 11: Serial transfer error

Video signal is output by setting the AV-CONT: “H”, E-V/Y: “H” and E-V/RGB: “H”. Color bar is output in the same way as (8-2).

(8-12) AV CONT Wide Mode check (EURO model only)
Color bar output from NTSC encoder
Error 11: Serial transfer error

Video signal is output by setting the AV-CONT: “H” and VS: “H. Color bar is output in the same way as (8-2).

(8-13) AV CONT Through check (EURO model only)
Color bar output from NTSC encoder
Error 11: Serial transfer error

Color bar is output from player by setting AV-CONT: “L” in the same way as (8-2). When machine works normally, the input video signal from EURO AV 2 is sent as it is, not the color bar signal.

(9) Audio related items
(9-2) Sampling frequency: 44.1kHz
16.9344MHz oscillation
Error 37: PLL DAC serial transfer interrupt is not detected.

Sampling frequency: 44.1kHz is set to PLL DAC. When error is not detected, a message is output which prompts key input. Observe output waveform at the terminal CXD8696R SCK02.

(9-3) Sampling frequency: 48kHz
18.4320 MHz oscillation
Error 37: PLL DAC serial transfer interrupt is not detected.

Sampling frequency: 48kHz is set to PLL DAC. When error is not detected, a message is output which prompts key input. Observe output waveform at the terminal CXD8696R SCK02.

(9-4) Sampling frequency: 96 kHz
36.8640 MHz oscillation
Error 37: PLL DAC serial transfer interrupt is not detected.

Sampling frequency: 96 kHz is set to PLL DAC. When error is not detected, a message is output which prompts key input. Observe output waveform at the terminal CXD8696R SCK02.

(9-5) Audio digital output
ROM audio data→ARP→AVD→Digital Audio I/F output
Error 10: Data transfer from ARP→AV Decoder is not possible.
37: PLL DAC serial transfer interrupt is not detected.

The AC3-Audio bit stream data that is stored in ROM, is transferred to AV decoder through ARP and is output to Digital Audio I/F. When error is not detected, a message is output which prompts key input. The analog output is muted.

(9-6) Audio digital mute
ROM audio data→ARP→AVD→Digital Audio I/F output
Error 10: Data transfer from ARP→to AV decoder is not possible.
37: PLL DAC serial transfer interrupt is not detected.

Bit stream of AC-3 Audio that is stored in ROM is sent to the AV decoder through ARP, and is output to Digital Audio I/F. At this time, the mute signal is turned on and off every other time four times, then is output.

First time:	Mute OFF	Sound can be heard
Second time:	Mute ON	Sound cannot be heard
Third time:	Mute OFF	Sound can be heard
Fourth time:	Mute ON	Sound cannot be heard

When error is not detected, a message is output which prompts key input.

(9-7) MPEG audio analog output
ROM audio data→ARP→AVD→2 ch DAC→Analog Audio Out
Error 10: Data transfer from ARP→ to AV decoder is not possible.
35: 2 ch DAC serial transfer interrupt is not detected.
37: PLL DAC serial transfer interrupt is not detected.

Bit stream data of MPEG-audio that is stored in ROM is sent to AV decoder through ARP, and is output in analog form from 2 ch DAC. When error is not detected, a message is output which prompts key input.

(9-8) Dual DAC (serial)
ROM audio data→ARP→AVD→2 ch DAC→Analog Audio Out (Attenuation)
Error 10: Data transfer from ARP→ to AV decoder is not possible.
35: 2 ch DAC serial transfer interrupt is not detected.
37: PLL DAC serial transfer interrupt is not detected.

Bit stream data of MPEG-audio that is stored in ROM is sent to AV decoder through ARP, and is output in analog form from 2 ch DAC after attenuation by 12 dB (-12 dB). When error is not detected, a message is output which prompts key input.

(9-9) Audio mute line
ROM audio data→ARP→AVD→Analog Audio Out (Mute)
Error 10: Data transfer from ARP→ to AV decoder is not possible.
35: 2 ch DAC serial transfer interrupt is not detected.
37: PLL DAC serial transfer interrupt is not detected.

Bit stream data of MPEG-audio that is stored in ROM is sent to AV decoder through ARP, and is output in analog form from 2 ch DAC. At this time the following mutes are turned on one after another to output the low frequency sound. The mute by SH I/O is turned on firstly, then mute by AV decoder is mute and lastly mute by the DAC setting is turned on. After that mutes are turned off so that the high frequency sound is output. This completes the check using the audible frequency sound. When mutes do not work, the low sound can be heard. This check can be repeated to find out which mute does not work by looking at the messages carefully while listening to sounds. When error is not detected, a message is output which prompts key input.

(9-10) MGA 16-bit→24-bit conversion (DD, KARAOKE models only)
ROM audio data→ARP→AVD (16-bit output) →MGA→Analog Audio Out
Error 10: Data transfer from ARP→ to AV decoder is not possible.
35: 2 ch DAC serial transfer interrupt is not detected.
37: PLL DAC serial transfer interrupt is not detected.

Check that the clock is delayed in accordance with the selector switch when the audio output from AVDEC is set to 16-bit. For confirmation, output the signal after setting the selector switch to off. When the machine works normally, sound of the first time is same as the sound of “MPEG audio: analog output”. However, sound of the second time has significantly the lower level (around -48dB). When error is not detected, a message is output which prompts key input. This check is performed in the DD machines and KARAOKE machines only.

(9-11) MGA - DCS selector switch check(DD machines only)
ROM audio data→ARP→AVD→MGA→Analog Audio Out
Error 10: Data transfer from ARP→ to AV decoder is not possible.
35: 2 ch DAC serial transfer interrupt is not detected.
37: PLL DAC serial transfer interrupt is not detected.

Check that the signal from AV decoder to DAC is cut off when the DCS selector switch is operated. Firstly, set DCS selector switch to on to output the lower frequency sound. For confirmation, set the selector switch to off to output the high frequency sound. When the high frequency sound is heard, check is completed. When the low frequency sound is heard before the end of this test, the DCS selector fails to work. When error is not detected, a message is output which prompts key input. This check is performed in DD machines only.

(9-12) MGA - KARAOKE selector switch check(KARAOKE machines only)
ROM audio data→ARP→AVD→MGA→Analog Audio Out
Error 10: Data transfer from ARP→ to AV decoder is not possible.
35: 2 ch DAC serial transfer interrupt is not detected.
37: PLL DAC serial transfer interrupt is not detected.

Check that the signal from AV decoder to DAC is cut off when the KARAOKE selector switch is operated. Firstly, set KARAOKE selector switch to on to output the lower frequency sound. For confirmation, set the selector switch to off to output the high frequency sound. When the high frequency sound is heard, check is completed. When the low frequency sound is heard before the end of this test, the DCS selector fails to work. When error is not detected, a message is output which prompts key input.
This check is performed in KARAOKE machines only.

(10) AC-3 related items [The supported models only]

(10-2) AC-3 DSP register

Write into serial register→Read from register and check if data agree

Error 05: Write data and read data do not agree.
11: Cannot receive serial data.
55: AC3 decoder (DSP) serial transmission interrupt is not detected.

This test is performed by writing a 20-bit data to the address 02F61h of the AC-3 decoder (DSP) and read it to check that the write data and the read data agree. Data from 0x00001 to 0x80000 is shifted to the right by one bit, and test repeated 20 times repeatedly.

(10-3) AC-3 DSP Reset line

Write into register→Resetting hardware→Read from register

Error 02: Reset error
11: Cannot receive serial data.
55: AC3 decoder (DSP) serial transmission interrupt is not detected.

This test is performed by writing the 20-bit data 0x34567 into the AC-3 decoder (DSP) address 02F61h, firstly then hardware reset is executed. Then the data is read and confirm that the data is initialized to 0x00000.

(10-4) AC-3 DSP download (serial)

Test program downloading operation check

Error 05: Downloading program does not work.
11: Cannot receive serial data.
14: Cannot download program.
55: AC3 decoder serial transfer interrupt is not detected.

This test is to check if the diagnosis test program works correctly or not. This test is performed by downloading the test program. The test program "abcde" is written to the AC-3 decoder address 0478d. Check that the data which has already been written to the address 0478d from host, is re-written to "abcde" when the diagnosis program is downloaded. The machine is set to the "test tone input mode" in order to download the test program. However, the test tone is not output because mute is applied. When write data and read data do not agree, error code 05 is output.

(10-5) AC-3 DSP SRAM check

AC-3 decoder SRAM is check by the decoder itself.

Error 03: Command write error
11: Cannot receive serial data.
14: Cannot download program.
55: AC3 decoder serial transfer interrupt is not detected.
57: Data bus error between AC3 decoder and SRAM
58: Address bus error between AC3 decoder and SRAM
93: Test is interrupted by the limit time over (about 1 second).

This test is performed by downloading the SRAM check program to the AC3 decoder, let the program operates and result is returned. The following two points are check.

(1) Data check: "00", "55", "AA" and "FF" are written/read to and from address 7100h.
(2) Address check: 7FFE byte data is written sequentially to the address starting from "FF", "55", "00", "FF", "55" and "00"..., then the data is read and checked. Result of check is read out from the decoder register. If end of check signal is not returned within one second, time-over error is issued.

(10-6) AC-3 DSP test tone
AC-3 DSP 5 channel sequential test tone output
Error 43: AC3 DAC (For main output) serial transfer interrupt is not detected.
44: AC3 DAC (For center output) serial transfer interrupt is not detected.
45: AC3 DAC (For surround output) serial transfer interrupt is not detected.
55: AC3 decoder serial transfer interrupt is not detected.

Test tone from the AC-3 decoder is output to the left, right, left surround, right surround and center in this order. Then the surround left and right are output at the same time using MGA. When error is not detected, a message is output which prompts key input.

(10-7) AC-3 audio output
ROM audio data→ARP→AVD→DIR→AC3 DSP→AC3 DAC →Audio signal output
Error 10: Data transfer from ARP→ to AV decoder is not possible.
35: 2 ch DAC serial transfer interrupt is not detected.
37: PLL DAC serial transfer interrupt is not detected.
43: AC3 DAC (For main output) serial transfer interrupt is not detected.
44: AC3 DAC (For center output) serial transfer interrupt is not detected.
45: AC3 DAC (For surround output) serial transfer interrupt is not detected.
52: DIR serial transfer interrupt is not detected.
55: AC3 decoder serial transfer interrupt is not detected.
56: DIR does not lock in.

The AC-3 bit stream data that is stored in ROM is sent to AV decoder through ARP. The decoded audio data is output from AC-3 DAC in the form of analog through DIR and AC-3 DSPs. When error is not detected, a message is output which prompts key input.

(10-8) Analog gain switch check
AC-3 DSP test tone→AC3 DAC→Audio Out (Analog Gain On/Off)
Error 43: AC3 DAC (For main output) serial transfer interrupt is not detected.
44: AC3 DAC (For center output) serial transfer interrupt is not detected.
45: AC3 DAC (For surround output) serial transfer interrupt is not detected.
55: AC3 decoder serial transfer interrupt is not detected.

The test tone is output from the front channel by setting the analog gain switch to on. For confirmation, the analog gain switch is turned off again to output the tone. Be careful that the sound of the first time is larger because gain is increased. When error is not detected, a message is output which prompts key input.

(10-9) AC-3 DAC (serial)
AC-3 DSP test tone→AC3 DAC→Audio Out (Attenuation)
Error 43: AC3 DAC (For main output) serial transfer interrupt is not detected.
44: AC3 DAC (For center output) serial transfer interrupt is not detected.
45: AC3 DAC (For surround output) serial transfer interrupt is not detected.
55: AC3 decoder serial transfer interrupt is not detected.

The AC-3 decoder test tone is output in the order of left, right, left surround, right surround and center. However, output of both channels are attenutated gradually by DAC. When error is not detected, a message is output which prompts key input.

(10-10) AC-3 to 2 ch (DCS path)
AC-3 DSP test tone→2 ch DAC→Audio Out
Error 35: 2 ch DAC serial transfer interrupt is not detected.
37: PLL DAC serial transfer interrupt is not detected.

Test tone from the AC-3 decoder is output from the 2 ch L and R terminals. When error is not detected, a message is output which prompts key input.

(11) KARAOKE related items [The supported models only]
(11-2) KARAOKE DSP register
Write into serial register→Read from register and check if data agree
Error 04: Data read error
05: Write data and read data do not agree.
54: KARAOKE DSP (CXD2721Q) interrupt is not detected.
62: KARAOKE DSP does not become ready.

The 16 different patterns of data that are generated by shifting data to the left by one bit starting from 0x0001, are written into RAM address 0x00 of KARAOKE DSP. This check is performed by writing data then reading again. If write data and read data do not agree, check can be repeated.

(11-3) KARAOKE DSP Reset line
Write into register→Resetting hardware→Read from register
Error 04: Data read error
05: Write data and read data do not agree.
54: KARAOKE DSP (CXD2721Q) interrupt is not detected.
62: KARAOKE DSP does not become ready.

This test is performed by writing 0x000fef to the KARAOKE DSP setup register address 0x00 and checks if the address is initialized to 0x000010 by reset pulse.

(11-4) KARAOKE DSP (serial)
ROM audio data→ARP→AVD→KARAOKE DSP→AOUT (Key control)
Error 10: Data transfer from ARP→ to AV decoder is not possible.
35: 2 ch DAC serial transfer interrupt is not detected.
37: PLL DAC serial transfer interrupt is not detected.
54: KARAOKE DSP(CXD2721Q) interrupt is not detected.
62: KARAOKE DSP does not become ready.

This test checks if tone key is change in accordance with the setting of KARAOKE DSP. Natural sound is output, firstly, and tone key is lowered by 8 steps and is output. When error is not detected, a message is output which prompts key input.

(11-5) Sound effect IC
Sound effect generation→analog out
Error 60: Sound effect IC does not become ready.
61: Sound effect IC does not become busy.

Clapping and cheers are output from the sound effect ICs. Clapping only for first time. Clapping with cheers in the second time. When error is not detected, a message is output which prompts key input. Output is supplied to both of 2ch and 6ch at the same time. When any key is not input, cheers keep output. Check the respective outputs.

(11-6) KARAOKE AC-3
ROM audio data→ARP→AVD→KARAOKE DSP→AC3 DEC→6ch DAC

Error 10: Data transfer from ARP→ to AV decoder is not possible.
35: 2 ch DAC serial transfer interrupt is not detected.
37: PLL DAC serial transfer interrupt is not detected.
43: AC3 DAC (For main output) serial transfer interrupt is not detected.
44: AC3 DAC (For center output) serial transfer interrupt is not detected.
45: AC3 DAC (For surround output) serial transfer interrupt is not detected.
54: KARAOKE DSP(CXD2721Q) interrupt is not detected.
55: AC3 decoder serial transfer interrupt is not detected.
62: KARAOKE DSP does not become ready.

The output from KARAOKE DSP is sent to AC3 decoder so that sound is output from channel 6.
The natural sound is output firstly by the key control. The key is moved down by eitht steps and the sound is output. When error is not detected, a message is output which prompts key input. However, sound is output to the front left and front right.

5-2-5. Diagnosis Error Code Table

01: The mode that is not supported, is selected.
02: Reset error
03: Data write error
04: Data read error
05: Write data and read data do not agree.
06: DMA transfer DREQ error
07: DMA transfer address error

10: Data transfer error between chips
11: Serial transfer error
12: EEPROM does not become ready.
13: Data Ready cannot be not set.
14: DSP download error

21: ARP interrupt is not detected.
22: Decrypt interrupt is not detected.

31: AVS decoder interrupt is not detected.
32: Servo DSP interrupt is not detected.
33: SSI interrupt is not detected.
34: DNR interrupt is not detected.
35: 2 ch DAC interrupt is not detected.
36: EEPROM interrupt is not detected.
37: PLL DAC interrupt is not detected.

40: 1914 ID error
41: V sync interrupt is not detected.
42: V sync interrupt cycle error
43: AC3 DAC (For main output) interrupt is not detected.
44: AC3 DAC (For center output) interrupt is not detected.
45: AC3 DAC (For surround output) interrupt is not detected.

52: DIR interrupt is not detected.
53: V-ENC (CXD1914) interrupt is not detected.
54: KARAOKE DSP(CXD2721Q) interrupt is not detected.
55: AC3 decoder interrupt is not detected.
56: DIR does not lock in.
57: Data bus error between AC3 decoder and SRAM
58: Address bus error between AC3 decoder and SRAM

60: Sound effect IC does not become ready.
61: Sound effect IC does not become busy.
62: KARAOKE DSP does not become ready.
63: KARAOKE DSP does not become busy.

90: Error in accordance with judgment of a person in charge of check.
91: Check of this item is stopped by key input.
92: All item check is stopped by key input.
93: Test is interrupted by the limit time-over.
99: Other errors

5-3. Drive Auto Adjustment

When the [1] key of remote commander is pressed from the initial menu, the automatic adjustment menu appears as shown below.

```
Drive Auto Adjustment
 SA. FFFFFF SI. FF EMG. 00

Select No.
 0:ALL      2:CD                  ← The message flashes
 1:DVD-SL   3:DVD-DL

 STOP: Press STOP  Key
```

Select [0: ALL] normally and perform automatic adjustment starting from the single layer DVD adjustment, CD adjustment then dual layer DVD adjustment. At the same time, the manual adjustment of individual item, is also available which shortens the returning time when errors occur during adjustment. The machines are easily adjusted by following the messages shown on display when the automatic adjustment is selected. The internal code numbers are shown in the EMG column when errors occur during automatic adjustment. Refer to the "Emergency Code Table" for details of the emergency codes. When the key either [0] or [1] or [2] or [3] of remote commander is pressed, the confirmation message appears as shown below. When you agree with the message, press [ENTER] and automatic adjustment starts. Another item number can be selected by pressing the desired item number if [ENTER] is not pressed yet. Automatic adjustment can be stopped and return to the initial menu at any time when you press [STOP].

```
Drive Auto Adjustment
 SA.000000 SI.00 EMG.00

0:  Adjustment ALL                ← Confirmation message
 0:ALL      2:CD
 3:DVD-SL   3:DVD-DL

 NEXT: Press ENTER  Key           ← The message flashes
 STOP: Press STOP   Key
```

5-3-1. [0] ALL

When [0: ALL] is selected, contents of EEPROM are cleared and settings are all initialized.
In the case of basic machine, adjustments are performed in the following order.
"5-3-2. [1] DVD Single Layer Disc"
"5-3-3. [2] CD Disc"
"5-3-4. [3] DVD Dual Layer Disc"
Disc tray comes out at each adjustment. Exchange the disc with the disc specified by the message. When the correct disc is inserted, the corresponding adjustment starts.

5-3-2. [1] DVD Single Layer Disc

When “[1] DVD Single Layer Disc” is selected and the DVD single layer disc is inserted, the adjustment is performed in the order described below. The adjustment values are saved in EEPROM.

DVD single layer adjustment procedure

LD ON
Spindle Start
Tilt ON
FOCUS ON
FOK Check
Sled Move

Auto Tracking Offset
FOK Check

Tracking ON
Sled ON
AGC ON
CLVA
Lock Check

Auto Loop Filter Offset
Auto Focus Offset
Auto Tilt Offset
Auto Focus offset

Servo Stop
Go To Home position

LD ON
Spindle Start
Tilt ON
Focus ON
FOK Check

↓

Tan-Position
FOK Check

Tracking ON
Sled ON
AGC ON
CLVA
Lock Check

Tangential screw adjustment (See below)
10k tj (rev)

Auto Loop Filter Offset
Auto Focus Offset
Auto Tilt Offset
Auto Focus Offset
Auto Focus Gain
Auto Tracking Gain
Auto EQ
Auto Loop Filter Offset
Pull in Memory
Jitter Check
Servo Stop
Search Check

[Tangential screw adjustment]

Make this adjustment only when the pickup was replaced.
As for adjustment, rotate the T-SKEW adjusting screw on the pickup so that the displayed jitter becomes minimum (CCW makes jitter smaller). Avoid extreme rotation or interference of screwdriver with the disc. After adjustment, a message to apply a screw locking agent will be displayed if jitter value is within the specification. Then, apply a drip of locking agent to the recess of screw. Hence, change discs following the given message on OSD, and the adjustment is finished if there is no problem.
Note that if “All” is selected, the data of previous adjustment are erased and initial values are set.

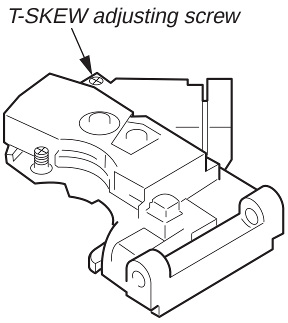

5-3-3. [2] CD disc

When “[2] CD Disc “ is selected and a CD is inserted, the adjustment is performed in the order described below. The adjustment values are saved in EEPROM.

CD adjustment procedure

LD ON
Spindle Start
Tilt ON
FOCUS ON
FOK Check

Auto Tracking Offset
FOK Check

Tracking ON
Sled ON
CLVA
Lock Check

Auto Loop Filter Offset
Auto Focus Offset
Auto Focus Gain
Auto Tracking Gain
Auto Loop Filter Offset
Pull in Memory
Jitter Check
Servo Stop
Search Check

5-3-4. [3] DVD dual layer disc

When “[3] DVD Dual Layer Disc” is selected and the DVD dual layer disc is inserted, the adjustment is performed in the order described below. The adjustment values of each layer are saved in EEPROM.

DVD dual layer adjustment procedure

(Layer 0)
LD ON
Spindle Start
Tilt ON
Focus ON
FOK Check
Sled Move

Auto Tracking Offset
FOK Check

Tracking ON
Sled ON
AGC ON
CLVA
Lock Check

Auto Focus Offset
Auto Tilt Offset
Auto Focus Offset
Auto Focus Gain
Auto Tracking Gain
Auto EQ

Layer Check
Jitter Check

(Layer 1)
Focus Jump (L0→L1)
FOK Check

Sled ON
CLVA
Lock Check
Layer Check

Auto Focus Offset
Auto Focus Gain
Auto Tracking Gain
Auto EQ
Pull in Memory

Jitter Check

Servo Stop
Search Check

5-4. Drive Manual Operation

```
Drive Manual Operation
 SA.FFFFFF SI.FF EMG.00

0.Disk Type
1.Manual Control 1
2.Manual Control 2
3.Manual Control 3
4.Manual Adjust 1
5.Manual Adjust 2
6.Auto Adjust
7.Check
```

When the [2] key of remote commander is pressed from the initial menu, the manual adjustment menu appears as shown above. When using the Manual Operation, be sure to follow the precautions described below.

> Select the disc to use from the disc type setting display.
> When Manual Operation is selected after turning on the main power, perform first Sled Init and Hydet Init using the 0. disc type display.
> If any abnormality occurs, press [STOP] immediately and turn off the main power.
> Do not perform automatic adjustment while the machine is in FG pause.

Be careful not make any mistakes when selecting command because these commands are not protected. When PLL locks in, sector address or time code is displayed.

Basic operations (The basic operations can be started either from front panel or remote commander.)

Power	Power button	Power OFF
Stop	Stop button	Servo Stop
Return	Return button	Returns to Drive Manual Operation
Set Up	SET UP button	After stopping the machine, returns to the Test Mode Menu
Eject/Loading	Open/Close button	Stop+Eject / Loading
CLEAR	CLEAR button	Moving between the menu's submodes
Ten key	0 to 9 button	Selection of menu
Cursor key	→, ↑ button	Increasing the Manual Adjust values
Cursor key	←, ↓ button	Decreasing the Manual Adjust values

5-4-1. Setup Displays In Accordance With Selected Disc Type

```
Disc Type
 SA.FFFFFF SI.FF EMG.00
0. DVD SL 12cm  9.Home
1. CD     12cm
2. DVD DL 12cm
3. DVD SL 8cm
4. CD     8cm
5. DVD DL 8cm
6. Disc Type Check
7. Hydet init
8. Sled init
  DVD SL 12cm
```

Select the desired type of disc from this display. Then the selected type of disc is displayed the bottom column. Press a number which corresponds to the desired type of disc. Be careful that optical system is damaged if other types of disc is loaded when DVD-DL is selected. Be sure to set the disc type without fail.

0.	DVD SL 12cm	Adjust the single layer DVD disc.
1.	CD 12cm	Adjust the CD disc.
2.	DVD DL 12cm	Adjust the dual layer DVD disc.
3.	DVD SL 8cm	Adjust the single layer DVD disc.
4.	CD 8cm	Adjust the CD disc.
5.	DVD DL 8cm	Adjust the dual layer DVD disc.
6.	Disk Type Check	Identifies the inserted disc automatically. Result of identification is shown in the bottom column. Confirm that it is right. There can be a case miss-identification when the machine is not adjusted yet after the EEPROM default setting is made. The CD in which only the inner circumference is cut, can be incorrectly identified as a DVD.
7.	Hydet init	Initialization is performed for direct searching and the hall amplifier gain is displayed.
8.	Sled init	The sled offset is displayed after canceling the offset value when the sled is stopped.
9.	Home	Moves to home position.

5-4-2. Manual Control (1)

Using this display, the playback system servo loops are turn on and off. The servo loops are normally turned on from the above described item 0. then 1. and sequentially. Normal trace is obtained at the item of CLVA. Address or time code in the case of CD is displayed. If it is not displayed, spindle servo fails to lock and the machine is faulty.
When the spindle system is faulty or when RF signal is not picked up, the spindle can run away. In such a case, do not operate CLVA.

0.	LD	Turns on and off the laser power.
1.	SP	Turns on and off the spindle system. When the spindle is turned on, it enter the constant speed mode.
2.	Tilt	Turns on and off the tilt servo system.
3.	Focus	Performs focus search and turns on the focus system. Operation is terminated when focus does not turn on after searching for three times or so.
4.	TRK.	Turns on and off the tracking servo system.
5.	Sled	Turns on and off the sled servo system.
6.	AGC	Turns on and off the focus error auto gain control using the pull-in level.
7.	CLVA	Spindle normal servo
8.	CAV	Spindle constant speed mode
9.	HOME	Moves to home position
→.	Sled FWD	Moves the sled in the direction to outer circumference. Perform this item with the tracking servo system off.
←.	Sled RVS	Moves the sled in the direction to inner circumference. Perform this item with the tracking servo system off.
↑.	Tilt Up	Moves the tilt upwards.
↓.	Tilt Down	Moves the tilt downwards.

5-4-3. Manual Control (2)

This display is different in the basic machine and the changer machine. The changer machine has the special command to control the mechanism.

Display of basic machine

```
Manual Contorol 2
 SA.FFFFFF SI.FF ENG.00

0.Pause    off 4.Eject
1.FCS.Srch off 5.Load

3.Tilt_H   off


  DVD SL 12cm
```

Eject and loading can be executed using the Open/Close button.

Display of changer machine

```
Manual Contorol 2
 SA.FFFFFF SI.FF ENG.00

0.Pause    off 4.Open
1.FCS.Srch off 5.Close
               6.Chuck
3.Tilt_H   off 7.Skip


  DVD SL 12cm
```

Open and close can be executed using the Open/Close button.
Chucking is not executed by close. Operate to chuck afer closed.

0.	Pause	Pause operation is possible by performing one track jump per one rotation of disc.
1.	FCS.Srch	The focus drive system is checked by applying the same voltage as the focus search.
3.	Tilt_H	The tilt gain is increased.
4.	Eject	Disc is ejected.
	(Open)	Tray is opened.
5.	Load	Loading is performed.
	(Close)	Tray is closed and un-chuck status is established.
6.	Chuck	Chucking is performed
7.	Skip	The disc position is skipped.

5-4-4. Manual Control (3)

```
Manual Control 3
 SA.0364AD SI.00 ENG.00

0.FWD  32TJ  6.FJ0→1
1.RVS  32TJ  7.FJ1→0
2.FWD 500TJ  8.Li0→1
3.RVS 500TJ  9.LJ1→0
4.FWD 10kTJ  →.FWD 1TJ
5.RVS 10kTJ  ←.RVS 1TJ

  DVD SL 12cm
```

The track jump and other operations are performed from this display. Check the sector information (S1) so as not to make any mistake in the DVD_DL layer jump direction. When SI is even number, layer is 0. When Si is odd number, layer is 1. The message “CD” appears when CD is inserted. In 1TJ and 32TJ, tracking is locked to on when executed. However the sled system returns to the initial status of execution. When jumps except 1TJ is performed, the player enters the CLVA mode. (Except FJ1, 2)

0.	FWD 32TJ	32 track jump (N track jump) forward
1.	RVS 32TJ	32 track jump (N track jump) reverse
2.	FWD 500TJ	500 track jump (fine searcj) forward
3.	RVS 500TJ	500 track jump (fine searcj) reverse
4.	FWD 10kTJ	10k track jump (direct search) forward
5.	RVS 10kTJ	10k track jump (direct search) reverse
6.	FJ0→1	Layer jump L0→L1, Tracking loop does not turn ON
7.	FJ1→0	Layer jump L1→L0, Tracking loop does not turn ON
8.	LJ0→1	Layer jump L0→L1, Tracking loop turns ON
9.	LJ1→0	Layer jump L1→L0, Tracking loop turns ON
→.	FWD 1TJ	1 track jump, forward
←.	RVS 1TJ	1 track jump, reverse

5-4-5. Manual Adjustment (1)

```
Manual Adjust 1
 SA.042807 SI.00 EMG.00

0.  TRK.  Offset
1.  TRK.  Offset2 (DVD)
2.  TRK.  Gain2 (CD)
3.  Focus Gain
4.  TRK.  Gain

   DVD SL 12cm
```

The manual adjustments in which jitter measurement is not performed, can be executed using this display. When any desired item number is selected, present setting of the item is shown. The adjustment value can be increased or decreased using the arrow mark keys (↑→↓←). The adjustment value is stored in EEPROM.

0.	TRK. Offset	The tracking offset adjustment is performed. When adjusting a DVD, the tracking offset is canceled coarsely by SSI33P3720A with the peak bottom that is measured by DSP. The fine tracking offset adjustment is performed within the DSP. This adjustment sets the value for the fine adjustment. Because this is the adjustment within the DSP only, the DC component of the tracking traverse is not chaned. When adjusting CD, this setting value only is changed.
1.	TRK. Offset2 (DVD)	The tracking offset adjustment of DVD is performed. (For SSI) Adjustment range: Lower 4 bits = 7 to 1, 8 to F (+175 to +25mV, 0 to -175mV)
2.	TRK. Gain2 (CD)	The simple AGC adjustment of CD is performed. Adjustment range:Higher 4 bits = x000 to x101(binary)
3.	Focus Gain	Focus gain is adjusted.
4.	TRK. Gain	Tracking gain is adjusted. When tracking gain in CD mode is adjusted, the simple AGC is set in which 5 different steps of -3.2, -1.6, 0, +1.6, +3.2 dB can be set in CXA2555Q based on the peak bottom that is measured by DSP. (Auto Tracking Offset) Then the setting inside DSP is performed. (Auto Tracking Gain) The setting inside DSP can be performed by this adjustment. When tracking gain in DVD mode is adjusted, only the setting inside DSP can be performed.

5-4-6. Manual Adjustment (2)

```
Manual Adjust 2
 SA.042A0B SI.00 EMG.00
0.Jitter         on
1.Focus Offset
2.Tilt  Offset
3.L.F.  Offset
```

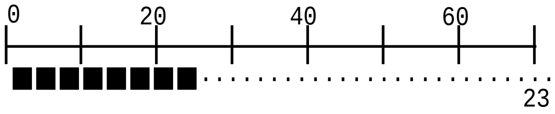


```
   DVD SL 12cm
```

The manual adjustments in which jitter measurement is performed, can be executed using this display. When a number is selected from 1 or 2 or 3, present setting of the selected item is shown. The adjustment value can be increased or decreased using the arrow mark keys (↑→↓←). When jitter value is displayed, display of the jitter meter swings. The adjustment value is stored in EEPROM.

0.	Jitter	The jitter measurement can be turned on or off. The jitter measurement is possible only when CLV disc is loaded.
1.	Focus Offset	The focus offset adjustment can be performed.
2.	Tilt Offset	The tilt offset adjustment can be performed.
3.	L. F. Offset	The electrical offset within ARP can be performed.

5-4-7. Automatic Adjustment

```
Auto Adjust
 SA.05BCA7 SI.00 EMG.00

0. Auto TRX.  Offset
1. Auto Tilt  Offset
2. Auto Focus Offset
3. Auto Focus Gain
4. Auto TRX.  Gain
5. Auto EQ
6. Auto L.F.  Offset
7. Memorize Pullin

  DVD SL 12cm
```

The respective adjustment items can be adjusted automatically from this display. However, be careful when performing the automatic adjustment because there are several limitations in it.

0.	Auto TRK. Offset	It performs the automatic adjustment of Tracking Offset. The adjustment value is stored in EEPROM. Perform this adjustment with the player in-Focus and and with Tracking Off. Because pickup moves toward outer circumference in this adjustment, do not perform this adjustment in outer circumference. In the case of CD adjustment, the simple AGC adjustment of tracking is also performed in this adjustment.
1.	Auto Tilt Offset	It performs the automatic adjsutment of Tilt Offset. The adjustment value is stored in EEPROM. Perform this adjustment when CLV is locked in. If this adjustment cannot be performed, adjust the Focus Offset and tangential skew adjustment first then perform this adjustment.
2.	Auto Focus Offset	It performs the automatic adjsutment of Focus Offset. The adjustment value is stored in EEPROM. Perform this adjustment when CLV is locked in. If this adjustment cannot be performed, adjust the Tilt Offset and tangential skew adjustment first then perform this adjustment.
3.	Auto Focus Gain	It performs the automatic adjsutment of Focus Gain. The adjustment value is stored in EEPROM. Perform this adjustment when CLV is locked in. If this adjustment cannot be performed, the player could be faulty.
4.	Auto TRK. Gain	It performs the automatic adjsutment of Tracking Gain. The adjustment value is stored in EEPROM. It is recommended to perform this adjustment when CLV is locked in. If this adjustment cannot be performed, the player could be faulty.

5. Auto EQ — It optimizes the RF equalizer. The adjustment value is stored in EEPROM. Perform this adjustment when CLV is locked in.
6. Auto L. F. Offset — It performs the electrical offset inside ARP. The adjustment value is stored in EEPROM. It is recommended to perform this adjustment when CLV is locked in.
7. Memorize Pullin — It stores the pull-in level in EEPROM.

5-4-8. Check

```
Check
 SA.FFFFFF SI.FF EMG.00

1.EEPROM Default



6.EEPROM Data

  DVD SL 12cm
```

From this display, list of the adjustment data initialization and adjsutment data of EEPROM drive are shown and either one of them can be selected.

1. EEPROM Default — Perform this item when you want to return the EEPROM setting to the default value in such cases when pickup is exchanged. However, if this item is performed, the former setting is cleared and lost. It is recommended to take note of the former setting values before performing this item.
6. EEPROM Data — The setting data of EEPROM is listed as shown below. the data is hexadecimal notation of “00” to “FF”. When you want to return to the original check display, press [6].

```
EEPROM Data
             CD --DVD--
ID no.00        SL L0 L1
Focus Offset ?? ?? ?? ??
Focus Gain   ?? ?? ?? ??
TRK. Offset  ?? ?? ?? ??
TRK. CONT    ?? ?? ?? ??
TRK. Gain    ?? ?? ?? ??
Tilt Offset  ?? ?? ?? ??
pullin Level ?? ?? ?? ??
EQ. Boost       ?? ?? ??
L.F.O        ?? ??
  SD. ??  HY. ??
```

ID No.	It does not have special meaning.
Focus Offset	Center of 00 to FF 80 (DVD-SL)
Focus Gain	Center of 00 to 7F 20 (DVD-SL)
TRK. Offset	Center of 00 to FF 80 (DVD-SL)
TRK. CONT	Higher 4 bits = 000 to x101(binary): The simple AGC adjustment value of CD Lower 4 bits = 7 to 1, 8 to F: SSI TRK.Offset of DVD
TRK. Gain	Center 00 to 7F 20 (DVD-SL)
Tilt Offset	Center 00 to FF 80 (DVD-SL)
Pullin Level	Center 80 to FF D0 (DVD-SL)
EQ. Boost	Fixed value depending upon the type disc
L.F.O. (Loop Filter Offset)	Lower 5 bits only are valid.
SD. (Sled Offset)	Around 50 to E0
HY. (HALL AMP Gain)	Around 60 to A0

5-5. Mechanism Aging

The mechanism aging display appears when the [3] key of remote control is key from the initial menu display.

```
Mecha Aging

Initialize Now            ← The message flashes

   Abort: STOP Key
```

The mechanism aging starts when disc is inserted, the key is operated depending upon the flashing message and the [PLAY] key is pressed. Press [STOP] to stop aging.

```
Mecha Aging

  Press OPEN Key          ← The message flashes

    Abort: STOP Key
```

5-6. History of Emergencies

The information such as history of abnormality of mechanism drive microprocessor, is dispalyed when the [4] key of the remote commander is pressed while the initial menu is displayed. This information is displayed on four pages. Move to the next page or previous page using the [↑] key and the [↓] key. Return to the initial menu by pressing the [RETURN] key.

```
EMG.  Hist       Page. 01        ← page
CD   000000 Hour                 ← Accumulated power-on time of CD laser
1. 00 00 00 00 00 00             ← History of emergencies (newest)
   00 00 00 00 00 00
2. 00 00 00 00 00 00             ← History of emergencies (2)
   00 00 00 00 00 00
Page Up :↑
            Exit:Return
```

```
EMG.  Hist       Page. 02        ← page
DVD   000000 Hour                ← Accumulated power-on time of DVD laser
3. 00 00 00 00 00 00             ← History of emergencies (3)
   00 00 00 00 00 00
4. 00 00 00 00 00 00             ← History of emergencies (4)
   00 00 00 00 00 00
Page Up :↑
PageDown:↓  Exit:Return
```

5-6-1. Hour Meter Display

The accumulated power-on time of the laser for CD is displayed on the odd numbered pages.

```
CD   ?????? Hour
```

The accumulated power-on time of the laser for DVD is displayed on the even numbered pages.

```
DVD   ?????? Hour
```

5-6-2. History of Emergencies Display

History of emergencies is displayed in the following format. The data is shown by hexadecimal numbers.

No.	EMG	MECHA	DISC	MODE	ERR2	ERR3
	ERR4	ERR5	ERR6	ERR7	ERR8	ERR9

No.: This is the memory number of emergency. The latest emergency is stored in memory No. 1. The previous emergencies are stored in No. 2 and later which are decremented as emergency occurs.
EMG: This is the category code of emergency. Refer to the emergency code table for more details.
MECHA: It shows status of mechanism when the emergency has occurred. Refer to the emergency code table for more details.
DISC: It shows the disc type/status when the emergency has occurred. Refer to the emergency code table for more details.
MODE: It shows the operation mode of system control microprocessor when emergency has occurred. Refer to the emergency code table for more details.
ERR2-9: It shows contents of system control microprocessor when the emergency has occurred.

5-6-3. Initialization of Emergency History

The following commands are prepared in order to clear the emergency history when optical unit is exchanged, when analysis of abnormalities starts or during assembling in the factory.

○ How to clear the accumulated laser power-on time
Press the keys of remote commander in the order of [DISPLAY] and [CLEAR].
Display of the accumulated power-on time is changed to "000000" when clearing is completed.

○ How to clear the history of emergencies
Press the keys of remote commander in the order of [TITLE] and [CLEAR].
Display of the history of emergencies is changed to "00".

○ How to clear pre-set of the system control
Press the keys of remote commander in the order of [DVD MENU] and [CLEAR].
The message "Clear User preset" flashes for about 3 seconds. Clearing pre-set can be canceled by stopping the [STOP] button.
When the initial data is saved in EEPROM, the message "Clear OK" is displayed and return to the EMG.Hist display.

5-7. Other Checks

The information such as destination and ROM revision information is displayed when the [5] key of remote commander is press. All display check for LEDs and display tubes is performed at the same time.

Display	Description
Rom Revision	
IF con Ver. 1.220 (AC9A)	← Revision information (Check Sum) of IF microprocessor
Model (01)	← Model code of IF microprocessor side
Region (02)	← Region number of IF microprocessor side
SW2 ON	← SW2 setting of IF microprocessor side
SW3 ON	← SW3 setting of IF microprocessor side
SYScon Ver. 1.000 (5816)	← Revision information (Check Sum) SYS microprocessor
Model (01)	← Model code SYS microprocessor side
Region (02)	← Region number microprocessor side
SIRCS:FF KEY:FF	← Key code of the pressed key

All displays of LEDs and display tubes turn on during this check. Status of the remote commander keys and panel keys are displayed in real time. However, the main power is turned off when the [POWER] key is pressed. When the [RETURN] key is pressed, the player exits this mode.
Press the [RETURN] key to return to the initial display and to turn off the LEDs and display tubes.

5-8. Appendix

5-8-1. Emergency Code Table

Automatic Adjustment, Manual Control ▼

```
SA.FFFFFF SI.00 EMG.00
```

History of emergencies ▼

No.	EMG	MECHA	DISC	MODE	ERR2	ERR3

00: NO EMG
01: EEPROM reading: NG (Check Sum has abnormality)
02: EEPROM writing: NG (Check Sum has abnormality)
03: EEPROM BUSY is displayed continuously exceeding the specified time.
04: The pointer that shows the newest Emg History has abnormality.
06: Communication between the HI microprocessor and the SYS microprocessor is interrupted for a specified time.
07: HI microprocessor cannot detect V-sync.

—— 1x : Electrical adjustment ——

10: EEPROM CHECK NG
16: DSP CHECK NG

—— 2x : Mechanism ———

20: Time out of home position movement
21: Sled driver has abnormal voltage.
26: (Changer) TRAY NG
27: (Changer) ROULETTE NG

—— 3x : Tilt/Adjustment ——

30: Hy Det Level adjustment has abnormality.
31: Sled Offset Cancel adjustment has abnormality.
32: Focus Gain adjustment is faulty.
33: Tracking Offset adjustment is faulty.
34: Tracking Gain adjustment is faulty.
35: JITTER NG

—— 4x : Focus ———

40: Focus Servo does not lock in.
41: Focus Jump failed.
42: DSP Error Code (not used)

—— 5x : Tracking ——

—— 6x : Spindle ——

60: Mis-chucking when disc is inserted.
61: When disc started rotation, it did not reach the target speed within 3 seconds.
62: Spindle runs away/does not stop.
63: LVLOCK NG
64: CLV servo does not lock in within the specified time.
65: FG servo does not reach the target speed within the specified time.
66: Spindle is not rotating at x1 speed. (RF Edge)

—— 7x : Seek system ——

70: System control requests address that does not exist.
71: System control requests time code that is not used.
72: System control requests track No. that is not used.
73: The lock-in operation is not completed within the specified number of times.

—— 8x : Data related items ——

80: Continuity of address has abnormality. (DVD)
81: Cannot read address even retry is executed. (CD)
82: TOC read is not completed within the specified period of time.
83: Physical Information Read Error (CTRL DATA ECC ERR)
84: Physical Information Read Error (CTRL DATA INSA ERR)
85: Physical Information Read Error (CTRL DATA FULL ERR)
86: Physical Information Read Error (CTRL DATA RUN OVER)
87: Physical Information Read Error (CTRL DATA Time Out)
88: Layer No has abnormality.
89: CD Text Data Read Error

—— 9x : etc ———

90: Servo recovery has failed when starting a disc.
96: Auto Sequence Time Out
97: Auto Sequence has exceeded the specified times.
98: Not used
99: Not used

The data of 0xA0 and higher is not displayed, but is stored in the error history.

For system control debugging (during stop mode)

A0: Stop request from drive microprocessor
A1: Did not return to the mode for a specified time.
A2: Feed error. Retry is impossible.
A3: GetInfo error. Stop
A4: An attempt is made to playback a DVD-R Disc
A5: Failed to execute Decrypt
A6: SlowR. Target address of searching is illegal.
A7: Feed error. Stop

For system control debugging (during retry mode)

B0: Due to feeder.
B1: Due to video hang-up
B2: Error in DMX
B3: Waiting for data from SlowR
B4: Navi Pack sector address is different during SlowR mode
B5: Video hang-up during SlowR mode
B6: Time out while waiting for ending of SlowR Gttgt
B7: Waiting for data during FF/FR
B8: Waiting for video data during FF/FR

For HI microprocessor debugging

C0: The installed HI microprocessor ROM does not match the destination.
C1: HI microprocessor UART1 communication port has abnormality.

For system control debugging

D0: EMG code is not present upon power-off request from drive microprocessor
D1: Cannot return t stop mode. Power Off

For drive control debugging

E0: Drive microprocessor - system error (STATUS ERR)
E1: Drive microprocessor - system error (MECHAMODE ERR)

Reservation of system (This is not errors.)

FC: No disc for aging test
FD: Sled Offset Cancel is executed during starting up a disc.
FE: LOCK RETRY
FF: EMG CHECK SKIP

5-8-2. Drive Mechanism Mode Table

History of emergencies ▼

No.	EMG	MECHA	DISC	MODE	ERR2	ERR3

00: PON ready
10: Stop
20: Trace
30: Pause
40: Drvcon Init
50: Mecha Init
60: Spin Up
61: Adjust (EF Balance)
62: Adjust (Jitter/Gain)
63: TOC/Control Data Read
70: Spin Down
80: Seek
90: Error Recovery
A0: Service
A1: Nop For Service
F0: Exception processing 1
F1: Exception processing 2
F2: Exception processing 3
F3: Exception processing 4
F4: Exception processing 5
FE: Changing modes is completed.
FF: Invalid Code (Mode is not changed.)

5-8-3. Disc Status Table

History of emergencies ▼

No.	EMG	MECHA	DISC	MODE	ERR2	ERR3

00: DISC_TYPE_TBD
01: DISC_TYPE_CD
02: DISC_TYPE_VCD
03: DISC_TYPE_DVD
04: DISC_TYPE_NODISC

10: DISC_TYPE_CD_ALL
20: DISC_TYPE_LIMITED
30: DISC_TYPE_CANTPLAY

5-8-4. System Control Microprocessor Operation Mode Table

History of emergencies ▼

No.	EMG	MECHA	DISC	MODE	ERR2	ERR3

When disc type = TBD	When disc type = DVD/VCD/CD
00: START	00: DISC_EXIT
01: CLOSE	01: DISC_INIT
02: OPEN	02: GET_INFO
03: POWER_OFF	03: STOP
04: DISC_CHECK	04: SEEK1
05: TBD_INIT	05: SEEK2
06: TBD_STOP	06: PLAY_READY
07: PLAY	
(5Discs)	08: PAUSE1
07: DISC_SEL	09: FAST_F
08: LOAD	0A: FAST_R
09: UNLOAD	0B: SLOW_F
	0C: SLOW_R
	0D: PAUSE2
	0E: PAUSE3

SECTION 6
ELECTRICAL ADJUSTMENT

In making adjustment, refer to 6-4. Adjustment Related Parts Arrangement.

This section describes procedures and instructions necessary for adjusting electrical circuits in this set.

Instruments required:

1) Color monitor TV
2) Oscilloscope 1 or 2 phenomena, band width over 100 MHz, with delay mode
3) Frequency counter (over 8 digits)
4) Digital voltmeter
5) Standard commander
6) DVD reference disc
   HLX-502 (J-6090-068-A) (dual layer)
   HLX-503 (J-6090-069-A) (single layer)

6-1. POWER SUPPLY CHECK (MB-78 board)

Mode	E-E
Instrument	Digital Voltmeter
EVER +5.3V Check	
Measurement Point	CN001 pin ③
Specification	5.4 ± 0.2V
REG + 3.3V Check	
Point	CN001 pin ⑤
Specification	3.3 ± 0.2V
REG +5.2V Check	
Point	CN001 pins ⑦, ⑧
Specification	5.2 ± 0.2V
M +12V Check	
Point	CN002 pin ②
Specification	$+12^{+1.0}_{-2.0}$ V
AU +12V Check	
Point	CN002 pin ⑦
Specification	$12.0^{+1.0}_{-2.0}$ V
AU –12V Check	
Point	CN002 pin ⑤
Specification	$-12^{+2.0}_{-1.0}$ V

Checking method:

1) Confirm that each voltage satisfies the specification.

6-2. SYSTEM CONTROL ADJUSTMENT

1. 27MHz Free Run (MB-78 board)

<Purpose>

27MHz is the reference clock for the MPEG system.

Mode	E-E
Test point	TP201 (27MHz)
Instrument	Oscilloscope, Frequency counter
Adjusting element	CT201
Specification	27000000 ±100Hz

Adjusting method:

1) Confirm that the waveform at TP201 is normal.
2) Adjust CT201 to attain 27000000 ± 100 Hz.

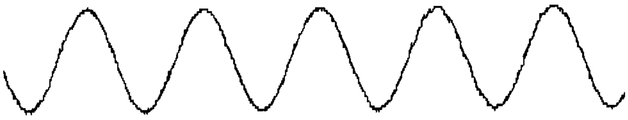

Fig. 6-1

6-3. VIDEO SYSTEM ADJUSTMENT

1. Video Level Adjustment (AU-199, MB-78 boards)

<Purpose>

This adjustment is made to satisfy the NTSC Standard, and if not adjusted correctly, the brightness will be too large or small.

Mode	CXD1914 (Serial) check in test mode menu “0” Syscon Diagnosis (8-2)
Signal	Color bars
Test point	J354 LINE OUT VIDEO (Terminating 75Ω)
Instrument	Oscilloscope
Adjusting element	RV251
Specification	1 ± 0.02 Vp-p

Adjusting method:

1) In the test mode initial menu “0” Syscon Diagnosis, set so that CXD1914 color bars are generated.
2) Adjust the RV251 to attain 1 ± 0.02 Vp-p.

Fig. 6-2

2. S-terminal Output Check (AU-199 board)

<Purpose>

Check S-terminal video output. If it is incorrect, pictures will not be displayed correctly in spite of connection to the TV with an S-terminal cable.

Mode	CXD1914 (Serial) check in test mode menu “0” Syscon Diagnosis (8-2)
Signal	Color bars
Test point	J354 S VIDEO OUT (Terminating 75Ω)
Instrument	Oscilloscope
Specification	1 ± 0.05 Vp-p

Checking method:

1) In the test mode initial menu “0” Syscon Diagnosis, set so that CXD1914 color bars are generated.
2) Confirm that the S-Y level is 1 ± 0.05 Vp-p.

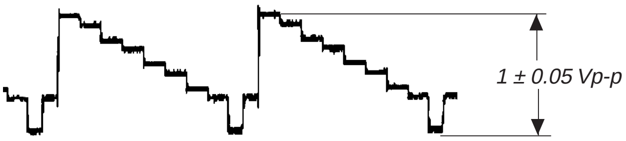

Fig. 6-3

3. Checking Composite Video Output Y (AU-199 board)

<Purpose>

This checks composite video output Y. If it is incorrect, correct brightness will not be attained when connected to, for instance, projector.

Mode	CXD1914 (Serial) check in test mode menu "0" Syscon Diagnosis (8-2)
Signal	Color bars
Test point	J354 LINE OUT VIDEO (Terminating 75Ω)
Instrument	Oscilloscope
Specification	1 ± 0.05 Vp-p

Checking method:

1) Confirm that the Y level is 1 ± 0.05 Vp-p.

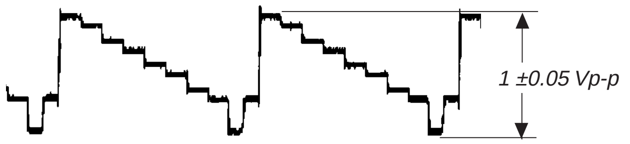

Fig. 6-7

4. Checking S Video Output S-C (AU-199 board)

<Purpose>

This checks whether the S-C satisfies the NTSC Standard. If it is not correct, the colors will be too dark or light.

Mode	CXD1914 (Serial) check in test mode menu "0" Syscon Diagnosis (8-2)
Signal	Color bars
Test point	J354 S VIDEO OUT
Instrument	Oscilloscope
Specification	286 ± 20 mVp-p

Connection:

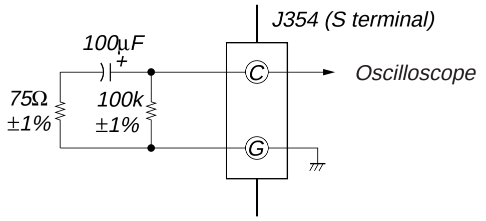

Fig. 6-5

Checking method:

1) Confirm that the S-C burst is 286 ± 20 mVp-p.

Fig. 6-6

5. Checking S Video Output DC Level (AU-199 board)

<Purpose>

This checks signals for S1 and S2 compatible TV. If they are not correct, the TV will not switch automatically to letter box, etc.

Mode	CXD1914 (Serial) check in test mode menu "0" Syscon Diagnosis (8-2)
Signal	Color bars
Test point	J354 S VIDEO OUT
Instrument	Digital voltmeter
Specification	S-terminal 0V: 0V S-terminal 5V: $5.0^{+0}_{-1.5}$ V

Connection:

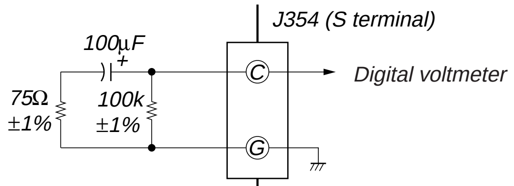

Fig. 6-4

Checking method:

1) In the test mode initial menu "0" Syscon Diagnosis, select S-terminal 0V.
Confirm that the voltage at J354 Ⓒ pin is 0V.
2) Press any key to select S-terminal 5V.
Confirm that the voltage at J354 Ⓒ pin is $5.0^{+0}_{-1.5}$ V.

6-4. ADJUSTMENT RELATED PARTS ARRANGEMENT

MB-78 BOARD (Side A)

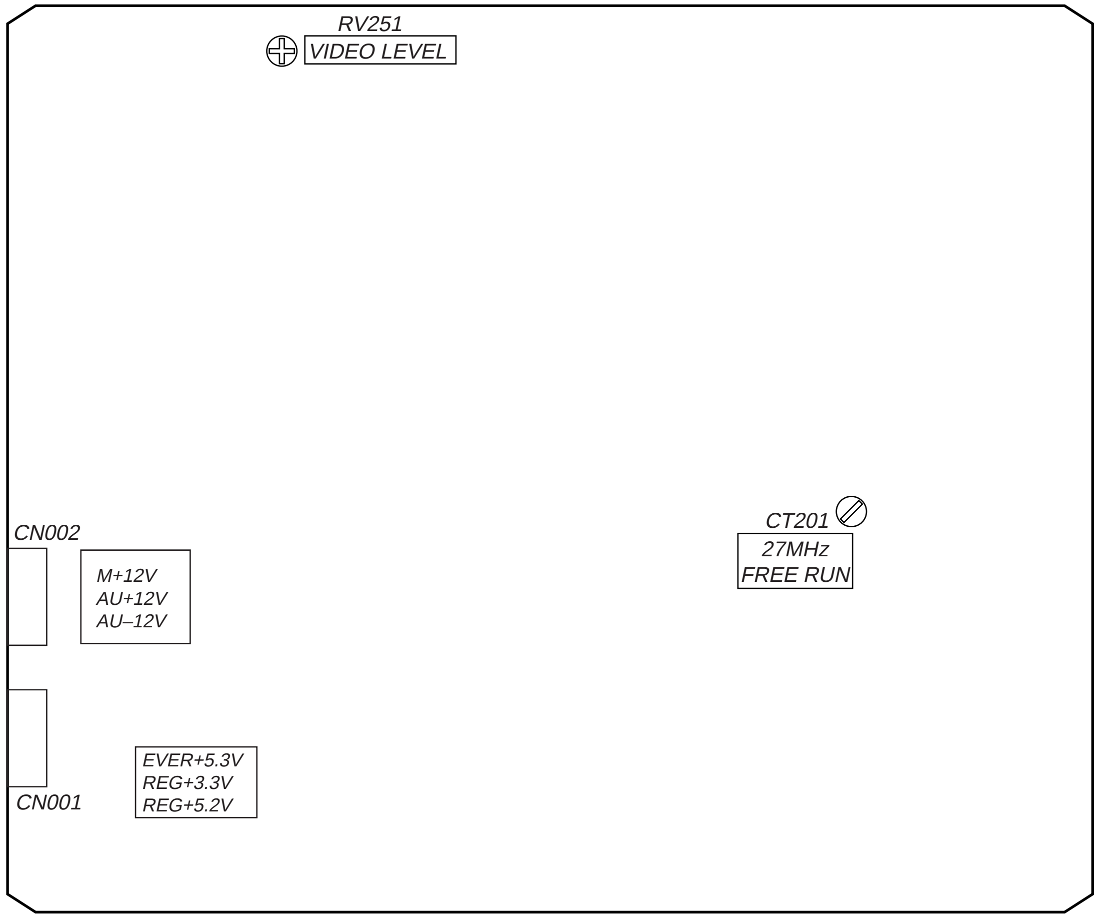

AU-199 BOARD (Side B)

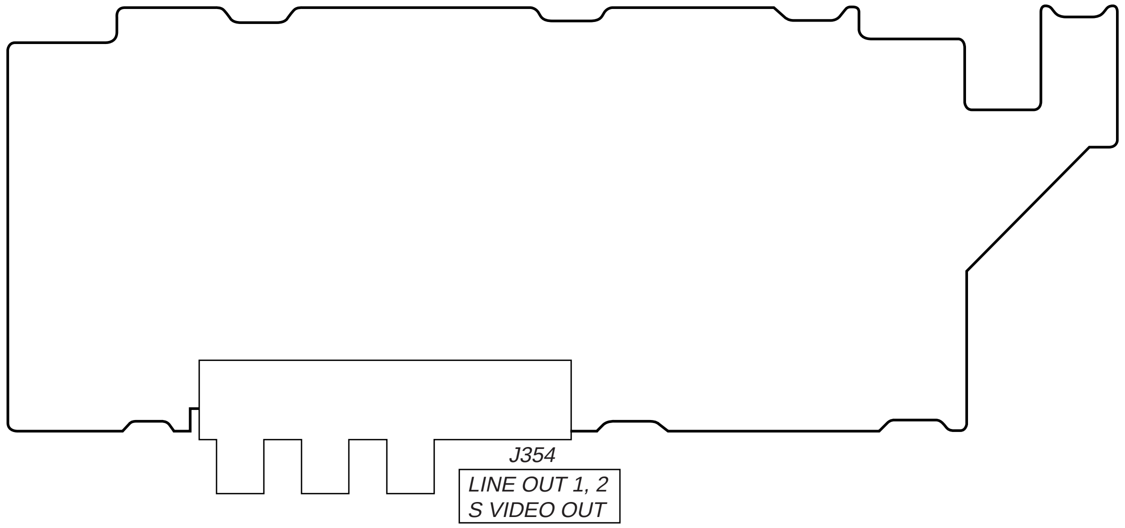

SECTION 7
REPAIR PARTS LIST

7-1. EXPLODED VIEWS

NOTE:

- -XX, -X mean standardized parts, so they may have some differences from the original one.
- Items marked "*" are not stocked since they are seldom required for routine service. Some delay should be anticipated when ordering these items.
- The mechanical parts with no reference number in the exploded views are not supplied.

The components identified by mark ⚠ or dotted line with mark ⚠ are critical for safety. Replace only with part number specified.

7-1-1. UPPER CASE, FRONT PANEL BLOCK ASSEMBLY

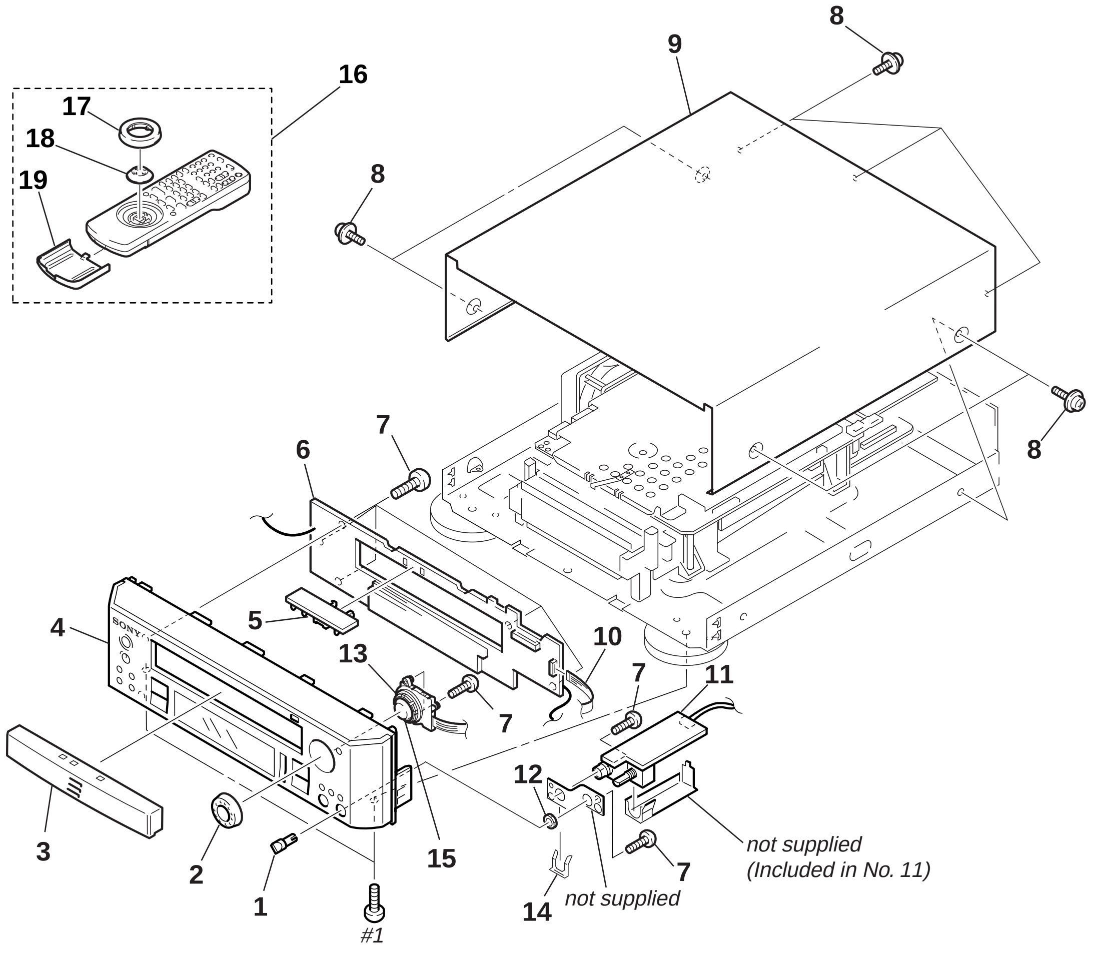

Ref. No.	Part No.	Description	Remarks
1	3-945-284-41	KNOB, VOLUME	
2	3-988-015-31	RING, SHUTTLE	
3	X-3948-391-1	ORNAMENT ASSY, TRAY	
4	X-3948-400-2	PANEL ASSY, FRONT	
* 5	A-6065-068-A	LE-21 BOARD, COMPLETE	
* 6	A-6065-067-A	FL-90 BOARD, COMPLETE	
7	4-951-620-01	SCREW (2.6X8), +BVTP	
8	3-363-099-01	SCREW (CASE 3 TP2)	
* 9	3-988-052-01	CASE, UPPER	
10	1-783-347-11	CABLE, FLAT (FML-7)	
* 11	A-6065-069-A	HP-98 BOARD, COMPLETE	
12	3-950-989-01	NUT (M7), HEXAGON	
13	1-475-685-11	ENCODER, ROTARY	
* 14	3-684-436-01	PLATE, MOUNT	
15	3-988-016-31	STICK, CURSOR	
16	1-475-686-31	COMMANDER, STANDARD RMT-D102E	
17	3-709-401-11	CRICK-RING	
18	3-709-402-11	KNOB, CURSOR	
19	3-709-044-21	LID, BATTERY	

7-1-2. CHASSIS BLOCK ASSEMBLY

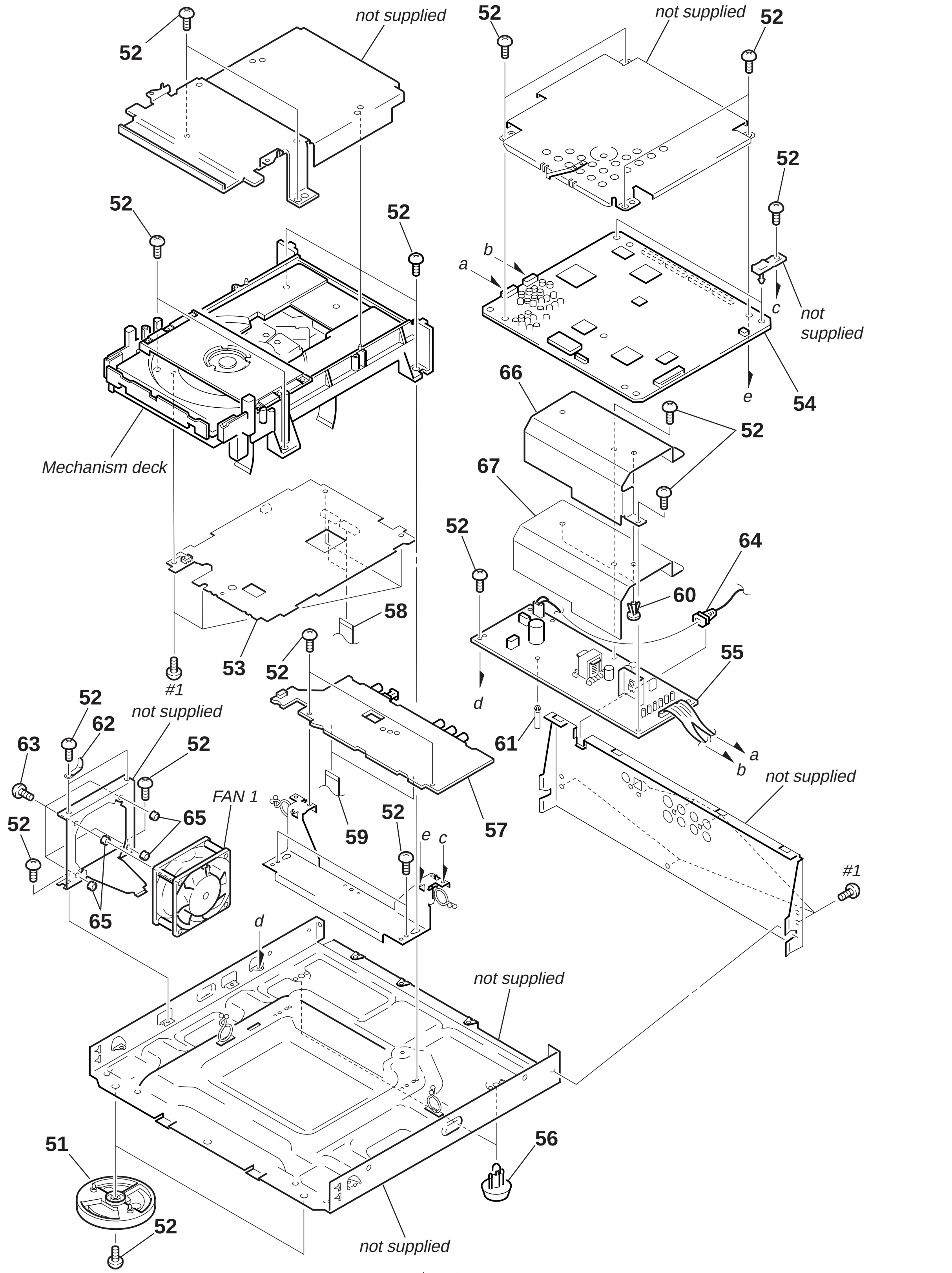

Ref. No.	Part No.	Description	Remarks	Ref. No.	Part No.	Description	Remarks
51	4-977-699-11	LEG (F)		60	3-646-090-11	RIVET, NYLON	
52	3-970-608-11	SUMITITE (B3), +BV		* 61	3-691-950-01	SPACER, P.C.BOARD	
* 53	A-6065-065-A	TK-47(B) BOARD, COMPLETE		* 62	3-703-150-11	CLAMP	
* 54	NOT SUPPLIED	MB-78 BOARD		63	3-975-023-01	SCREW, CUSHION STOPPER	
* 55	1-468-287-21	POWER BLOCK HS-930SH (EXCEPT E)		⚠64	1-782-001-61	CORD, POWER (EXCEPT CN)	
* 55	1-468-287-31	POWER BLOCK HS-930SF (E)		⚠64	1-782-692-31	CORD, POWER (CN)	
56	4-965-822-01	FOOT		65	3-570-118-01	CUSHION, MOTOR	
* 57	A-6065-066-A	AU-199 BOARD, COMPLETE		66	3-989-529-01	CASE, SHIELD, POWER	
58	1-783-339-11	CABLE, FLAT (FMT-21)		67	3-989-530-01	SHEET, INSULATING, POWER	
59	1-783-343-11	CABLE, FLAT (FMA-4)		FAN1	1-698-792-11	FAN, DC	

Note : The components identified by mark ⚠ or dotted line with mark ⚠ are critical for safety. Replace only with part number specified.

7-1-3. DVD MECHANISM CHASSIS BLOCK ASSEMBLY (1)

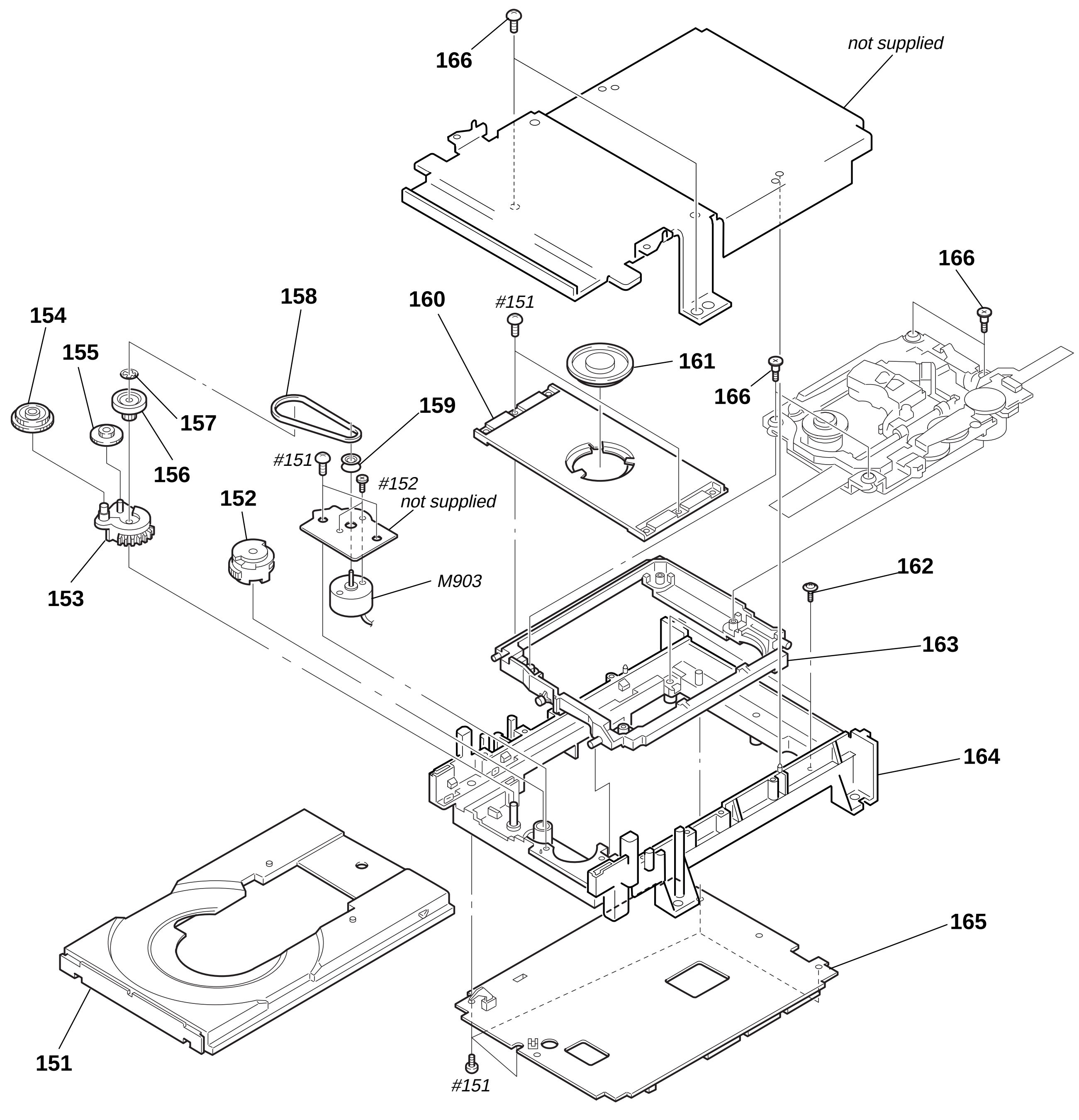

Ref. No.	Part No.	Description	Remarks
151	3-975-090-01	TRAY	
152	3-975-073-02	GEAR, CAM	
153	3-975-087-01	GEAR, DRIVE	
154	3-975-086-01	GEAR, TRAY DRIVING	
155	3-975-072-01	GEAR, LOADING (MIDWAY)	
156	3-975-071-01	PULLEY, LOADING	
157	3-669-596-00	WASHER (2.3), STOPPER	
158	3-975-070-01	BELT	
159	3-975-085-01	PULLEY, MOTOR	
160	3-975-089-01	BRACKET, PRESS PULLEY	
* 161	3-975-074-01	PULLEY, PRESS	
162	3-975-077-01	SCREW, BU STOPPER	
* 163	3-975-088-03	HOLDER, BASE UNIT	
* 164	X-3948-398-1	HOLDER ASSY, MD	
* 165	A-6065-065-A	TK-47(B) BOARD, COMPLETE	
166	4-981-923-01	SCREW (M), STEP	
M903	1-698-942-21	MOTOR (LOADING)	

7-1-3. DVD MECHANISM CHASSIS BLOCK ASSEMBLY (2)

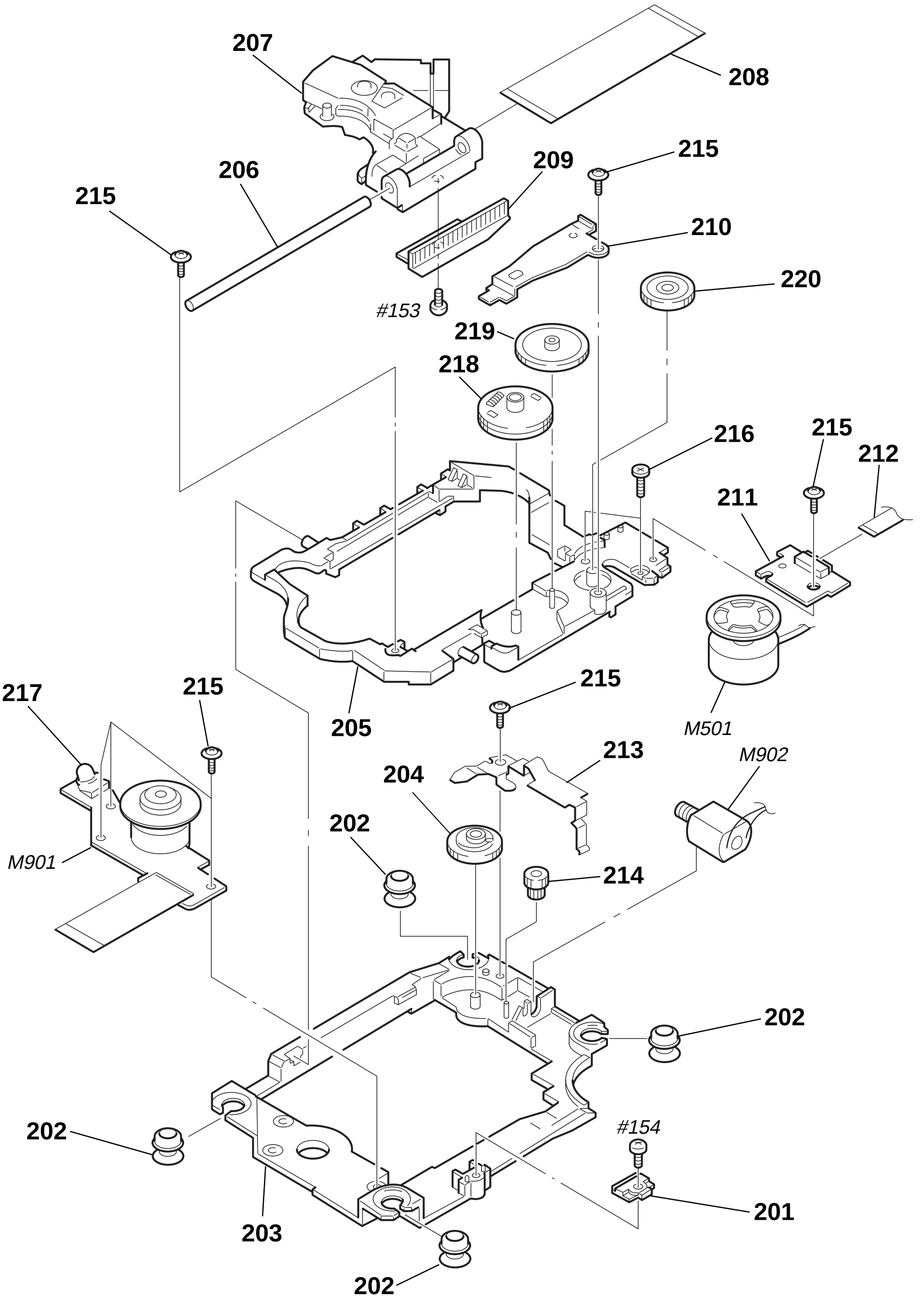

Ref. No.	Part No.	Description	Remarks
* 201	3-975-066-01	STOPPER, SKEW SHAFT	
* 202	3-975-061-01	INSULATOR	
* 203	3-975-056-01	BASE, SPINDLE	
204	3-975-058-01	CAM, SKEW	
* 205	3-975-063-01	BASE, SLIDE	
* 206	3-975-065-01	SHAFT, MAIN	
⚠207	8-820-005-02	DEVICE, OPTICAL KHS-180A/J1N	
208	1-665-390-11	OP-15 FLEXIBLE BOARD	
209	3-975-067-01	GEAR, RACK	
* 210	3-975-064-01	RETAINER, SLED GEAR	
* 211	A-6065-078-A	FG-43(A) COMPL BOARD, COMPLETE	
* 213	3-975-059-01	RETAINER, SKEW GEAR	
214	3-975-057-01	GEAR, SKEW	
215	4-974-711-01	SCREW (2X5)(P TYIGHT),(+)PTTWH	
216	4-974-725-01	SCREW (M1.7X2.5), P	
218	A-4683-008-A	GEAR ASSY, LIMITTER	
219	4-974-720-01	GEAR (S-B)	
220	4-974-726-01	GEAR (S-A)	
221	1-783-341-11	CABLE, FLAT (FMF-28)	
M501	X-3947-137-1	MOTOR ASSY, SLED	
M901	1-698-944-11	MOTOR, DC (SPINDLE)	
M902	X-3947-138-1	MOTOR ASSY, SKEW	

Note : The components identified by mark ⚠ or dotted line with mark ⚠ are critical for safety.
Replace only with part number specified.

7-2. ELECTRICAL PARTS LIST

NOTE:

When indicating parts by reference number, please include the board name.

The components identified by mark ⚠ or dotted line with mark ⚠ are critical for safety. Replace only with part number specified.

- Due to standardization, replacements in the parts list may be different from the parts specified in the diagrams or the components used on the set.
- -XX, -X mean standardized parts, so they may have some difference from the original one.
- Items marked "*" are not stocked since they are seldom required for routine service. Some delay should be anticipated when ordering these items.
- CAPACITORS:
  uF: μF

- RESISTORS
  All resistors are in ohms.
  METAL: metal-film resistor
  METAL OXIDE: Metal Oxide-film resistor
  F: nonflammable
- COILS
  uH: μH
- SEMICONDUCTORS
  In each case, u: μ, for example:
  uA...: μA... , uPA... , μPA... ,
  uPB... , μPB... , uPC... , μPC... ,
  uPD..., μPD...

Ref. No.	Part No.	Description			Remarks
*	A-6065-066-A	AU-199 BOARD, COMPLETE			
		**********************			
		(Ref.No.: 2,000 Series)			
		< CAPACITOR >			
C202	1-119-774-91	ELECT	100uF	20%	16V
C203	1-119-774-91	ELECT	100uF	20%	16V
C204	1-124-589-11	ELECT	47uF	20%	16V
C205	1-124-589-11	ELECT	47uF	20%	16V
C207	1-164-004-11	CERAMIC CHIP	0.1uF	10%	25V
C208	1-164-004-11	CERAMIC CHIP	0.1uF	10%	25V
C216	1-164-232-11	CERAMIC CHIP	0.01uF		50V
C217	1-164-232-11	CERAMIC CHIP	0.01uF		50V
C224	1-130-484-00	MYLAR	0.012uF	5%	50V
C225	1-130-484-00	MYLAR	0.012uF	5%	50V
C232	1-136-850-11	FILM	0.1uF	5%	63V
C233	1-164-232-11	CERAMIC CHIP	0.01uF		50V
C234	1-130-467-00	MYLAR	470PF	5%	50V
C235	1-126-926-11	ELECT	1000uF	20%	10V
C236	1-130-467-00	MYLAR	470PF	5%	50V
C239	1-124-589-11	ELECT	47uF	20%	16V
C240	1-124-589-11	ELECT	47uF	20%	16V
C245	1-124-261-00	ELECT	10uF	20%	50V
C264	1-164-232-11	CERAMIC CHIP	0.01uF		50V
C267	1-136-850-11	FILM	0.1uF	5%	63V
C268	1-136-850-11	FILM	0.1uF	5%	63V
C269	1-164-232-11	CERAMIC CHIP	0.01uF		50V
C286	1-136-850-11	FILM	0.1uF	5%	63V
C287	1-136-850-11	FILM	0.1uF	5%	63V
C290	1-117-793-11	MYLAR	330PF	5%	50V
C291	1-117-793-11	MYLAR	330PF	5%	50V
C298	1-164-232-11	CERAMIC CHIP	0.01uF		50V
C299	1-124-589-11	ELECT	47uF	20%	16V
C300	1-164-232-11	CERAMIC CHIP	0.01uF		50V
C301	1-124-261-00	ELECT	10uF	20%	50V
C302	1-124-589-11	ELECT	47uF	20%	16V
C303	1-163-231-11	CERAMIC CHIP	15PF	5%	50V
C304	1-163-243-11	CERAMIC CHIP	47PF	5%	50V
C305	1-163-243-11	CERAMIC CHIP	47PF	5%	50V
C306	1-163-243-11	CERAMIC CHIP	47PF	5%	50V
C341	1-164-004-11	CERAMIC CHIP	0.1uF	10%	25V
C342	1-126-518-11	ELECT	470uF	20%	4V
C351	1-124-584-00	ELECT	100uF	20%	10V
C352	1-124-584-00	ELECT	100uF	20%	10V
C353	1-126-518-11	ELECT	470uF	20%	4V

Ref. No.	Part No.	Description			Remarks
C354	1-126-518-11	ELECT	470uF	20%	4V
C355	1-164-004-11	CERAMIC CHIP	0.1uF	10%	25V
C356	1-124-589-11	ELECT	47uF	20%	16V
C357	1-164-004-11	CERAMIC CHIP	0.1uF	10%	25V
C365	1-163-259-91	CERAMIC CHIP	220PF	5%	50V
C372	1-136-850-11	FILM	0.1uF	5%	63V
C374	1-124-589-11	ELECT	47uF	20%	16V
C650	1-119-774-91	ELECT	100uF	20%	16V
C698	1-164-004-11	CERAMIC CHIP	0.1uF	10%	25V
		< CONNECTOR >			
CN201	1-774-769-11	CONNECTOR, FFC/FPC 25P			
CN203	1-774-769-11	CONNECTOR, FFC/FPC 25P			
CN205	1-573-733-11	PIN, CONNECTOR 6P			
CN604	1-506-482-11	PIN, CONNECTOR 3P			
* CN606	1-564-518-11	PLUG, CONNECTOR 3P			
		< DIODE >			
D201	8-719-988-62	DIODE 1SS355			
D202	8-719-988-62	DIODE 1SS355			
D354	8-719-016-73	DIODE STZ6.8TT146			
D356	8-719-016-73	DIODE STZ6.8TT146			
D358	8-719-016-73	DIODE STZ6.8TT146			
D361	8-719-016-73	DIODE STZ6.8TT146			
D362	8-719-975-40	DIODE RB411D			
D363	8-719-975-40	DIODE RB411D			
D634	8-719-988-62	DIODE 1SS355			
D635	8-719-210-33	DIODE EC10DS2			
		< FERRITE BEAD >			
FB201	1-414-553-11	INDUCTOR 0UH			
FB202	1-414-553-11	INDUCTOR 0UH			
FB203	1-414-135-11	INDUCTOR CHIP 0UH			
FB204	1-414-135-11	INDUCTOR CHIP 0UH			
FB205	1-414-135-11	INDUCTOR CHIP 0UH			
FB209	1-414-135-11	INDUCTOR CHIP 0UH			
FB210	1-414-135-11	INDUCTOR CHIP 0UH			
FB211	1-414-135-11	INDUCTOR CHIP 0UH			
FB352	1-414-553-11	INDUCTOR 0UH			
FB353	1-414-553-11	INDUCTOR 0UH			
FB354	1-414-553-11	INDUCTOR 0UH			
FB355	1-414-553-11	INDUCTOR 0UH			
FB356	1-414-553-11	INDUCTOR 0UH			
FB357	1-414-553-11	INDUCTOR 0UH			
FB358	1-414-553-11	INDUCTOR 0UH			

AU-199

Ref. No.	Part No.	Description			Remarks
		< IC >			
IC201	8-759-522-17	IC NJM79M09DLA(TE1)			
IC202	8-759-284-66	IC NJM78M08DLA(TE1)			
IC206	8-759-278-58	IC NJM4558V-TE2			
IC207	8-759-278-58	IC NJM4558V-TE2			
IC214	8-759-278-58	IC NJM4558V-TE2			
IC215	8-759-526-70	IC CXD8750N-T2			
IC217	8-759-324-03	IC HA17431UA-TL			
IC351	8-759-522-11	IC BA7660FS-E2			
IC352	8-749-921-12	IC GP1F32T (DIGITAL OUT: OPTICAL)			
IC601	8-759-522-18	IC NJM78M09DLA(TE1)			
		< JACK >			
J353	1-779-382-11	JACK, PIN 1P (DIGITAL OUT: COAXIAL)			
J354	1-694-409-41	TERMINAL BOARD (VIDEO, AUDIO LINE OUT 1, 2/S VIDEO OUT 1, 2)			
		< COIL >			
L351	1-408-962-21	INDUCTOR	2.2uH		
L352	1-408-962-21	INDUCTOR	2.2uH		
L354	1-414-926-21	INDUCTOR	0.47uH		
L355	1-412-951-11	INDUCTOR	10uH		
L356	1-412-951-11	INDUCTOR	10uH		
L357	1-412-951-11	INDUCTOR	10uH		
		< TRANSISTOR >			
Q201	8-729-424-08	TRANSISTOR	UN2111		
Q202	8-729-216-22	TRANSISTOR	2SA1162		
Q203	8-729-023-22	TRANSISTOR	2SD2114KT146		
Q204	8-729-023-22	TRANSISTOR	2SD2114KT146		
Q214	8-729-044-77	TRANSISTOR	2SK739-Z-E1		
Q351	8-729-424-08	TRANSISTOR	UN2111		
Q352	8-729-421-19	TRANSISTOR	UN2213		
Q353	8-729-120-28	TRANSISTOR	2SC1623-L5L6		
Q641	8-729-105-29	TRANSISTOR	2SA1385		
Q642	8-729-421-19	TRANSISTOR	UN2213		
Q643	8-729-421-19	TRANSISTOR	UN2213		
		< RESISTOR >			
R201	1-216-033-00	METAL CHIP	220	5%	1/10W
R202	1-208-798-11	RES,CHIP	4.7K	0.50%	1/10W
R206	1-216-109-00	METAL CHIP	330K	5%	1/10W
R207	1-216-109-00	METAL CHIP	330K	5%	1/10W
R208	1-216-069-00	METAL CHIP	6.8K	5%	1/10W
R209	1-216-069-00	METAL CHIP	6.8K	5%	1/10W
R213	1-216-071-00	METAL CHIP	8.2K	5%	1/10W
R218	1-216-071-00	METAL CHIP	8.2K	5%	1/10W
R222	1-208-804-11	RES,CHIP	8.2K	0.50%	1/10W
R223	1-216-047-91	RES,CHIP	820	5%	1/10W
R224	1-216-047-91	RES,CHIP	820	5%	1/10W
R225	1-216-025-91	RES,CHIP	100	5%	1/10W
R226	1-216-053-00	METAL CHIP	1.5K	5%	1/10W
R227	1-216-045-00	METAL CHIP	680	5%	1/10W
R228	1-216-045-00	METAL CHIP	680	5%	1/10W

Ref. No.	Part No.	Description			Remarks
R229	1-216-053-00	METAL CHIP	1.5K	5%	1/10W
R231	1-216-073-00	METAL CHIP	10K	5%	1/10W
R235	1-216-109-00	METAL CHIP	330K	5%	1/10W
R236	1-216-109-00	METAL CHIP	330K	5%	1/10W
R241	1-216-041-00	METAL CHIP	470	5%	1/10W
R242	1-216-041-00	METAL CHIP	470	5%	1/10W
R249	1-216-073-00	METAL CHIP	10K	5%	1/10W
R250	1-216-097-91	RES,CHIP	100K	5%	1/10W
R254	1-208-805-11	RES,CHIP	9.1K	0.50%	1/10W
R255	1-216-049-91	RES,CHIP	1K	5%	1/10W
R258	1-216-049-91	RES,CHIP	1K	5%	1/10W
R262	1-216-296-91	SHORT	0		
R269	1-216-097-91	RES,CHIP	100K	5%	1/10W
R284	1-216-025-91	RES,CHIP	100	5%	1/10W
R285	1-216-025-91	RES,CHIP	100	5%	1/10W
R298	1-216-025-91	RES,CHIP	100	5%	1/10W
R305	1-216-025-91	RES,CHIP	100	5%	1/10W
R308	1-216-025-91	RES,CHIP	100	5%	1/10W
R309	1-216-025-91	RES,CHIP	100	5%	1/10W
R310	1-216-025-91	RES,CHIP	100	5%	1/10W
R314	1-216-041-00	METAL CHIP	470	5%	1/10W
R315	1-216-041-00	METAL CHIP	470	5%	1/10W
R316	1-216-041-00	METAL CHIP	470	5%	1/10W
R317	1-216-041-00	METAL CHIP	470	5%	1/10W
R332	1-216-025-91	RES,CHIP	100	5%	1/10W
R333	1-216-049-91	RES,CHIP	1K	5%	1/10W
R334	1-216-295-91	SHORT	0		
R335	1-216-295-91	SHORT	0		
R336	1-216-295-91	SHORT	0		
R337	1-216-295-91	SHORT	0		
R338	1-216-295-91	SHORT	0		
R339	1-216-295-91	SHORT	0		
R340	1-216-295-91	SHORT	0		
R341	1-216-295-91	SHORT	0		
R350	1-216-057-00	METAL CHIP	2.2K	5%	1/10W
R351	1-216-021-00	METAL CHIP	68	5%	1/10W
R352	1-216-021-00	METAL CHIP	68	5%	1/10W
R353	1-216-021-00	METAL CHIP	68	5%	1/10W
R354	1-216-021-00	METAL CHIP	68	5%	1/10W
R355	1-216-021-00	METAL CHIP	68	5%	1/10W
R356	1-216-021-00	METAL CHIP	68	5%	1/10W
R357	1-216-057-00	METAL CHIP	2.2K	5%	1/10W
R358	1-216-073-00	METAL CHIP	10K	5%	1/10W
R359	1-216-057-00	METAL CHIP	2.2K	5%	1/10W
R360	1-216-073-00	METAL CHIP	10K	5%	1/10W
R363	1-216-033-00	METAL CHIP	220	5%	1/10W
R364	1-216-021-00	METAL CHIP	68	5%	1/10W
R369	1-216-025-91	RES,CHIP	100	5%	1/10W
R373	1-216-037-00	METAL CHIP	330	5%	1/10W
R374	1-216-037-00	METAL CHIP	330	5%	1/10W
R375	1-216-037-00	METAL CHIP	330	5%	1/10W
R381	1-216-017-91	RES,CHIP	47	5%	1/10W
R382	1-216-017-91	RES,CHIP	47	5%	1/10W
R383	1-216-017-91	RES,CHIP	47	5%	1/10W
R384	1-216-295-91	SHORT	0		
R385	1-216-295-91	SHORT	0		
R756	1-216-073-00	METAL CHIP	10K	5%	1/10W
R757	1-216-061-00	METAL CHIP	3.3K	5%	1/10W
R758	1-216-073-00	METAL CHIP	10K	5%	1/10W

Ref. No.	Part No.	Description	Remarks
*	A-6065-078-A	FG-43(A) BOARD, COMPLETE	
		*************************	
			(Ref.No.: 2,000 Series)
		< CONNECTOR >	
CN501	1-784-684-11	CONNECTOR, FFC/FPC 8P	
		< IC >	
IC501	8-719-052-42	IC ELEMENT, HOLE HW-108A-FT(D)	
IC502	8-719-052-42	IC ELEMENT, HOLE HW-108A-FT(D)	

Ref. No.	Part No.	Description	Remarks
*	A-6065-067-A	FL-90 BOARD, COMPLETE	
		*********************	
			(Ref.No.: 2,000 Series)
*	4-946-899-01	HOLDER (FL)	
		< CAPACITOR >	
C101	1-126-205-11	ELECT CHIP 47uF 20%	6.3V
C102	1-164-232-11	CERAMIC CHIP 0.01uF	50V
C103	1-126-205-11	ELECT CHIP 47uF 20%	6.3V
C104	1-165-319-11	CERAMIC CHIP 0.1uF	50V
C105	1-126-400-11	ELECT 22uF 20%	35V
C106	1-126-603-11	ELECT CHIP 4.7uF 20%	35V
C107	1-126-204-11	ELECT CHIP 47uF 20%	16V
C108	1-126-204-11	ELECT CHIP 47uF 20%	16V
C109	1-126-205-11	ELECT CHIP 47uF 20%	6.3V
C110	1-163-251-11	CERAMIC CHIP 100PF 5%	50V
C111	1-165-319-11	CERAMIC CHIP 0.1uF	50V
C112	1-126-204-11	ELECT CHIP 47uF 20%	16V
C113	1-164-232-11	CERAMIC CHIP 0.01uF	50V
C114	1-126-603-11	ELECT CHIP 4.7uF 20%	35V
		< CONNECTOR >	
* CN101	1-564-529-11	CONNECTOR, BOARD TO BOARD 5P	
CN102	1-770-703-11	CONNECTOR, FFC/FPC 20P	
CN103	1-784-683-11	CONNECTOR, FFC/FPC 9P	
		< DIODE >	
D106	8-719-056-06	DIODE SLR-342DCT31	
D107	8-719-064-11	DIODE SPR-325MVW	
D108	8-719-420-90	DIODE MA8051-M	
D109	8-719-977-61	DIODE DTZ20B	
D110	8-719-210-39	DIODE EC10QS-04	
D111	8-719-210-39	DIODE EC10QS-04	
		< EARTH TERMINAL >	
* ET101	1-537-738-21	TERMINAL, EARTH	
		< FERRITE BEAD >	
FB101	1-414-553-11	INDUCTOR 0UH	
FB102	1-414-553-11	INDUCTOR 0UH	
* FB103	1-500-449-21	FERRITE 0UH	
		< FILTER >	
FL101	1-233-893-21	FILTER, CHIP EMI	
		< IC >	
IC101	8-759-438-82	IC uPD16311GC-AB6	
IC102	8-759-459-83	IC NJL55H400	
		< COIL >	
L101	1-408-974-21	INDUCTOR 22uH	
L102	1-408-974-21	INDUCTOR 22uH	
		< FLUORESCENT INDICATOR >	
ND101	1-517-714-11	INDICATOR TUBE, FLUORESCENT	
		< TRANSISTOR >	
Q105	8-729-424-08	TRANSISTOR UN2111	
Q106	8-729-105-29	TRANSISTOR 2SA1385	
Q107	8-729-216-22	TRANSISTOR 2SA1162	
		< RESISTOR >	
R103	1-216-037-00	METAL CHIP 330 5%	1/10W
R104	1-216-073-00	METAL CHIP 10K 5%	1/10W
R105	1-216-073-00	METAL CHIP 10K 5%	1/10W
R106	1-216-073-00	METAL CHIP 10K 5%	1/10W
R107	1-216-073-00	METAL CHIP 10K 5%	1/10W
R108	1-216-049-91	RES,CHIP 1K 5%	1/10W
R109	1-216-091-00	METAL CHIP 56K 5%	1/10W
R110	1-216-295-91	SHORT 0	
R111	1-216-295-91	SHORT 0	
R112	1-216-295-91	SHORT 0	
R115	1-216-077-00	METAL CHIP 15K 5%	1/10W
R116	1-216-037-00	METAL CHIP 330 5%	1/10W
R117	1-216-029-00	METAL CHIP 150 5%	1/10W
R118	1-216-073-00	METAL CHIP 10K 5%	1/10W
R119	1-216-071-00	METAL CHIP 8.2K 5%	1/10W
R120	1-216-065-91	RES,CHIP 4.7K 5%	1/10W
R121	1-216-073-00	METAL CHIP 10K 5%	1/10W
R122	1-216-295-91	SHORT 0	
R123	1-216-061-00	METAL CHIP 3.3K 5%	1/10W
R124	1-216-059-00	METAL CHIP 2.7K 5%	1/10W
R125	1-216-059-00	METAL CHIP 2.7K 5%	1/10W
R126	1-216-055-00	METAL CHIP 1.8K 5%	1/10W
R127	1-216-063-91	RES,CHIP 3.9K 5%	1/10W
R128	1-216-055-00	METAL CHIP 1.8K 5%	1/10W
R129	1-216-009-00	METAL CHIP 22 5%	1/10W
R130	1-216-063-91	RES,CHIP 3.9K 5%	1/10W
R131	1-216-077-00	METAL CHIP 15K 5%	1/10W
R132	1-216-081-00	METAL CHIP 22K 5%	1/10W
R133	1-216-053-00	METAL CHIP 1.5K 5%	1/10W
R134	1-216-073-00	METAL CHIP 10K 5%	1/10W
R135	1-216-053-00	METAL CHIP 1.5K 5%	1/10W
R136	1-216-053-00	METAL CHIP 1.5K 5%	1/10W
R137	1-216-055-00	METAL CHIP 1.8K 5%	1/10W
R138	1-216-077-00	METAL CHIP 15K 5%	1/10W
R139	1-216-025-91	RES,CHIP 100 5%	1/10W
R140	1-216-025-91	RES,CHIP 100 5%	1/10W
R141	1-216-025-91	RES,CHIP 100 5%	1/10W
R142	1-216-025-91	RES,CHIP 100 5%	1/10W
R143	1-216-059-00	METAL CHIP 2.7K 5%	1/10W
R144	1-216-061-00	METAL CHIP 3.3K 5%	1/10W

Ref. No.	Part No.	Description			Remarks
R145	1-216-065-91	RES,CHIP	4.7K	5%	1/10W
R146	1-216-071-00	METAL CHIP	8.2K	5%	1/10W
		< SWITCH >			
S101	1-771-349-21	SWITCH, KEYBOARD (RETURN)			
S102	1-771-349-21	SWITCH, KEYBOARD (DVD MENU)			
S103	1-771-349-21	SWITCH, KEYBOARD (TITLE)			
S104	1-771-349-21	SWITCH, KEYBOARD (NEXT)			
S106	1-771-349-21	SWITCH, KEYBOARD (PREV)			
S107	1-771-349-21	SWITCH, KEYBOARD (PROGRAM)			
S108	1-771-349-21	SWITCH, KEYBOARD (PLAY)			
S109	1-771-349-21	SWITCH, KEYBOARD (CLEAR)			
S110	1-771-349-21	SWITCH, KEYBOARD (STOP)			
S111	1-771-349-21	SWITCH, KEYBOARD (OPEN/CLOSE)			
S112	1-771-349-21	SWITCH, KEYBOARD (SHUFFLE)			
S113	1-771-349-21	SWITCH, KEYBOARD (PAUSE)			
S114	1-771-349-21	SWITCH, KEYBOARD (JOG)			
S115	1-771-349-21	SWITCH, KEYBOARD (POWER)			
S116	1-771-349-21	SWITCH, KEYBOARD (REPEAT)			
		< TRANSFORMER >			
T101	1-431-779-11	TRANSFORMER, DC-DC CONVERTER			
*	A-6065-115-A	HP-98(A) BOARD, COMPLETE			
		*************************			
					(Ref.No.: 2,000 Series)
		< CAPACITOR >			
C002	1-163-011-11	CERAMIC CHIP	0.0015uF	10%	50V
C003	1-163-011-11	CERAMIC CHIP	0.0015uF	10%	50V
C008	1-164-232-11	CERAMIC CHIP	0.01uF		50V
C009	1-164-232-11	CERAMIC CHIP	0.01uF		50V
		< CONNECTOR >			
CN001	1-573-733-11	PIN, CONNECTOR 6P			
		< DIODE >			
D001	8-719-800-76	DIODE 1SS226			
D002	8-719-016-73	DIODE STZ6.8TT146			
D003	8-719-016-73	DIODE STZ6.8TT146			
		< FERRITE BEAD >			
FB001	1-414-135-11	INDUCTOR CHIP 0UH			
FB002	1-414-135-11	INDUCTOR CHIP 0UH			
FB003	1-414-135-11	INDUCTOR CHIP 0UH			
		< IC >			
IC001	8-759-369-74	IC NJM4556AM-TE2			
		< JACK >			
J001	1-568-519-41	JACK, LARGE TYPE (PHONES)			
		< TRANSISTOR >			
Q001	8-729-023-22	TRANSISTOR 2SD2114KT146			
Q002	8-729-023-22	TRANSISTOR 2SD2114KT146			
		< RESISTOR >			
R001	1-216-029-00	METAL CHIP	150	5%	1/10W
R002	1-216-029-00	METAL CHIP	150	5%	1/10W
R003	1-216-089-91	RES,CHIP	47K	5%	1/10W
R004	1-216-089-91	RES,CHIP	47K	5%	1/10W
R005	1-216-081-00	METAL CHIP	22K	5%	1/10W
R006	1-216-081-00	METAL CHIP	22K	5%	1/10W
R007	1-216-049-91	RES,CHIP	1K	5%	1/10W
R008	1-216-049-91	RES,CHIP	1K	5%	1/10W
R009	1-216-049-91	RES,CHIP	1K	5%	1/10W
R010	1-216-049-91	RES,CHIP	1K	5%	1/10W
R011	1-216-295-91	SHORT	0		
R012	1-216-295-91	SHORT	0		
		< VARIABLE RESISTOR >			
RV001	1-225-606-11	RES, VAR, CARBON 10K/10K (PHONES LEVEL)			
*	A-6065-068-A	LE-21 BOARD, COMPLETE			
		**********************			
					(Ref.No.: 2,000 Series)
		< CONNECTOR >			
* CN401	1-562-516-11	CONNECTOR, BOARD TO BOARD 5P			
		< DIODE >			
D401	8-719-056-06	DIODE SLR-342DCT31			
D402	8-719-056-06	DIODE SLR-342DCT31			
D403	8-719-056-06	DIODE SLR-342DCT31			
		< RESISTOR >			
R401	1-216-037-00	METAL CHIP	330	5%	1/10W
R402	1-216-037-00	METAL CHIP	330	5%	1/10W
R403	1-216-037-00	METAL CHIP	330	5%	1/10W
		MB-78 BOARD			
		************			
					(Ref.No.: 1,000 Series)
	3-709-100-01	COVER, IC SOCKET			
		< CAPACITOR >			
C002	1-126-206-11	ELECT CHIP	100uF	20%	6.3V
C003	1-126-206-11	ELECT CHIP	100uF	20%	6.3V
C004	1-126-204-11	ELECT CHIP	47uF	20%	16V
C005	1-126-204-11	ELECT CHIP	47uF	20%	16V
C006	1-126-204-11	ELECT CHIP	47uF	20%	16V
C007	1-126-206-11	ELECT CHIP	100uF	20%	6.3V
C008	1-126-206-11	ELECT CHIP	100uF	20%	6.3V
C009	1-107-682-11	CERAMIC CHIP	1uF	10%	16V
C010	1-107-682-11	CERAMIC CHIP	1uF	10%	16V
C011	1-126-206-11	ELECT CHIP	100uF	20%	6.3V
C012	1-126-206-11	ELECT CHIP	100uF	20%	6.3V
C015	1-126-204-11	ELECT CHIP	47uF	20%	16V
C016	1-126-206-11	ELECT CHIP	100uF	20%	6.3V
C017	1-126-206-11	ELECT CHIP	100uF	20%	6.3V
C018	1-126-204-11	ELECT CHIP	47uF	20%	16V

Ref. No.	Part No.	Description			Remarks
C021	1-126-204-11	ELECT CHIP	47uF	20%	16V
C023	1-126-206-11	ELECT CHIP	100uF	20%	6.3V
C025	1-126-204-11	ELECT CHIP	47uF	20%	16V
C026	1-126-206-11	ELECT CHIP	100uF	20%	6.3V
C031	1-126-206-11	ELECT CHIP	100uF	20%	6.3V
C200	1-162-970-11	CERAMIC CHIP	0.01uF	10%	25V
C201	1-126-206-11	ELECT CHIP	100uF	20%	6.3V
C202	1-162-970-11	CERAMIC CHIP	0.01uF	10%	25V
C203	1-162-970-11	CERAMIC CHIP	0.01uF	10%	25V
C204	1-162-970-11	CERAMIC CHIP	0.01uF	10%	25V
C205	1-162-970-11	CERAMIC CHIP	0.01uF	10%	25V
C206	1-162-970-11	CERAMIC CHIP	0.01uF	10%	25V
C207	1-162-970-11	CERAMIC CHIP	0.01uF	10%	25V
C208	1-162-970-11	CERAMIC CHIP	0.01uF	10%	25V
C209	1-162-970-11	CERAMIC CHIP	0.01uF	10%	25V
C210	1-162-970-11	CERAMIC CHIP	0.01uF	10%	25V
C211	1-162-970-11	CERAMIC CHIP	0.01uF	10%	25V
C214	1-162-970-11	CERAMIC CHIP	0.01uF	10%	25V
C215	1-162-964-11	CERAMIC CHIP	0.001uF	10%	50V
C216	1-162-970-11	CERAMIC CHIP	0.01uF	10%	25V
C217	1-162-970-11	CERAMIC CHIP	0.01uF	10%	25V
C218	1-162-970-11	CERAMIC CHIP	0.01uF	10%	25V
C219	1-128-004-11	ELECT CHIP	10uF	20%	16V
C220	1-162-970-11	CERAMIC CHIP	0.01uF	10%	25V
C221	1-162-970-11	CERAMIC CHIP	0.01uF	10%	25V
C222	1-162-970-11	CERAMIC CHIP	0.01uF	10%	25V
C224	1-162-970-11	CERAMIC CHIP	0.01uF	10%	25V
C226	1-162-970-11	CERAMIC CHIP	0.01uF	10%	25V
C227	1-162-970-11	CERAMIC CHIP	0.01uF	10%	25V
C228	1-162-970-11	CERAMIC CHIP	0.01uF	10%	25V
C229	1-126-204-11	ELECT CHIP	47uF	20%	16V
C230	1-162-915-11	CERAMIC CHIP	10PF	0.5PF	50V
C231	1-162-970-11	CERAMIC CHIP	0.01uF	10%	25V
C232	1-162-917-11	CERAMIC CHIP	15PF	5%	50V
C233	1-162-970-11	CERAMIC CHIP	0.01uF	10%	25V
C234	1-162-970-11	CERAMIC CHIP	0.01uF	10%	25V
C236	1-162-970-11	CERAMIC CHIP	0.01uF	10%	25V
C240	1-126-206-11	ELECT CHIP	100uF	20%	6.3V
C250	1-162-970-11	CERAMIC CHIP	0.01uF	10%	25V
C251	1-162-970-11	CERAMIC CHIP	0.01uF	10%	25V
C252	1-128-004-11	ELECT CHIP	10uF	20%	16V
C253	1-162-970-11	CERAMIC CHIP	0.01uF	10%	25V
C254	1-162-970-11	CERAMIC CHIP	0.01uF	10%	25V
C255	1-162-970-11	CERAMIC CHIP	0.01uF	10%	25V
C256	1-162-970-11	CERAMIC CHIP	0.01uF	10%	25V
C257	1-128-004-11	ELECT CHIP	10uF	20%	16V
C258	1-162-970-11	CERAMIC CHIP	0.01uF	10%	25V
C259	1-128-004-11	ELECT CHIP	10uF	20%	16V
C260	1-162-970-11	CERAMIC CHIP	0.01uF	10%	25V
C261	1-162-970-11	CERAMIC CHIP	0.01uF	10%	25V
C262	1-162-970-11	CERAMIC CHIP	0.01uF	10%	25V
C263	1-162-970-11	CERAMIC CHIP	0.01uF	10%	25V
C264	1-107-826-11	CERAMIC CHIP	0.1uF	10%	16V
C265	1-162-970-11	CERAMIC CHIP	0.01uF	10%	25V
C266	1-162-970-11	CERAMIC CHIP	0.01uF	10%	25V
C267	1-107-826-11	CERAMIC CHIP	0.1uF	10%	16V
C268	1-107-826-11	CERAMIC CHIP	0.1uF	10%	16V
C269	1-162-970-11	CERAMIC CHIP	0.01uF	10%	25V
C270	1-162-917-11	CERAMIC CHIP	15PF	5%	50V
C271	1-162-917-11	CERAMIC CHIP	15PF	5%	50V

Ref. No.	Part No.	Description			Remarks
C272	1-162-917-11	CERAMIC CHIP	15PF	5%	50V
C282	1-107-826-11	CERAMIC CHIP	0.1uF	10%	16V
C301	1-162-967-11	CERAMIC CHIP	0.0033uF	10%	50V
C303	1-126-193-11	ELECT	1uF	20%	50V
C304	1-162-967-11	CERAMIC CHIP	0.0033uF	10%	50V
C305	1-165-176-11	CERAMIC CHIP	0.047uF	10%	16V
C306	1-162-970-11	CERAMIC CHIP	0.01uF	10%	25V
C309	1-164-245-11	CERAMIC CHIP	0.015uF	10%	25V
C310	1-162-967-11	CERAMIC CHIP	0.0033uF	10%	50V
C312	1-164-489-11	CERAMIC CHIP	0.22uF	10%	16V
C313	1-162-967-11	CERAMIC CHIP	0.0033uF	10%	50V
C314	1-162-968-11	CERAMIC CHIP	0.0047uF	10%	50V
C315	1-162-968-11	CERAMIC CHIP	0.0047uF	10%	50V
C316	1-128-004-11	ELECT CHIP	10uF	20%	16V
C317	1-162-967-11	CERAMIC CHIP	0.0033uF	10%	50V
C318	1-162-967-11	CERAMIC CHIP	0.0033uF	10%	50V
C319	1-162-970-11	CERAMIC CHIP	0.01uF	10%	25V
C320	1-162-967-11	CERAMIC CHIP	0.0033uF	10%	50V
C321	1-162-970-11	CERAMIC CHIP	0.01uF	10%	25V
C322	1-162-967-11	CERAMIC CHIP	0.0033uF	10%	50V
C323	1-109-982-11	CERAMIC CHIP	1uF	10%	10V
C324	1-162-967-11	CERAMIC CHIP	0.0033uF	10%	50V
C325	1-165-176-11	CERAMIC CHIP	0.047uF	10%	16V
C326	1-128-004-11	ELECT CHIP	10uF	20%	16V
C327	1-162-970-11	CERAMIC CHIP	0.01uF	10%	25V
C328	1-107-826-11	CERAMIC CHIP	0.1uF	10%	16V
C329	1-162-970-11	CERAMIC CHIP	0.01uF	10%	25V
C330	1-107-826-11	CERAMIC CHIP	0.1uF	10%	16V
C331	1-107-826-11	CERAMIC CHIP	0.1uF	10%	16V
C332	1-107-826-11	CERAMIC CHIP	0.1uF	10%	16V
C333	1-162-970-11	CERAMIC CHIP	0.01uF	10%	25V
C334	1-107-826-11	CERAMIC CHIP	0.1uF	10%	16V
C335	1-126-204-11	ELECT CHIP	47uF	20%	16V
C336	1-162-970-11	CERAMIC CHIP	0.01uF	10%	25V
C337	1-126-204-11	ELECT CHIP	47uF	20%	16V
C338	1-107-826-11	CERAMIC CHIP	0.1uF	10%	16V
C339	1-162-970-11	CERAMIC CHIP	0.01uF	10%	25V
C340	1-128-004-11	ELECT CHIP	10uF	20%	16V
C342	1-162-970-11	CERAMIC CHIP	0.01uF	10%	25V
C343	1-162-970-11	CERAMIC CHIP	0.01uF	10%	25V
C344	1-162-970-11	CERAMIC CHIP	0.01uF	10%	25V
C362	1-162-970-11	CERAMIC CHIP	0.01uF	10%	25V
C363	1-128-004-11	ELECT CHIP	10uF	20%	16V
C365	1-162-970-11	CERAMIC CHIP	0.01uF	10%	25V
C366	1-128-004-11	ELECT CHIP	10uF	20%	16V
C367	1-107-826-11	CERAMIC CHIP	0.1uF	10%	16V
C368	1-107-826-11	CERAMIC CHIP	0.1uF	10%	16V
C369	1-107-826-11	CERAMIC CHIP	0.1uF	10%	16V
C370	1-107-826-11	CERAMIC CHIP	0.1uF	10%	16V
C372	1-162-970-11	CERAMIC CHIP	0.01uF	10%	25V
C373	1-128-004-11	ELECT CHIP	10uF	20%	16V
C378	1-107-826-11	CERAMIC CHIP	0.1uF	10%	16V
C379	1-107-826-11	CERAMIC CHIP	0.1uF	10%	16V
C380	1-107-826-11	CERAMIC CHIP	0.1uF	10%	16V
C381	1-107-826-11	CERAMIC CHIP	0.1uF	10%	16V
C382	1-107-826-11	CERAMIC CHIP	0.1uF	10%	16V
C383	1-107-826-11	CERAMIC CHIP	0.1uF	10%	16V
C384	1-107-826-11	CERAMIC CHIP	0.1uF	10%	16V
C385	1-107-826-11	CERAMIC CHIP	0.1uF	10%	16V
C386	1-128-004-11	ELECT CHIP	10uF	20%	16V

Ref. No.	Part No.	Description			Remarks
C387	1-107-682-11	CERAMIC CHIP	1uF	10%	16V
C388	1-162-928-11	CERAMIC CHIP	120PF	5%	50V
C389	1-162-927-11	CERAMIC CHIP	100PF	5%	50V
C390	1-110-563-11	CERAMIC CHIP	0.068uF	10%	16V
C391	1-110-563-11	CERAMIC CHIP	0.068uF	10%	16V
C392	1-162-957-11	CERAMIC CHIP	220PF	5%	50V
C393	1-162-957-11	CERAMIC CHIP	220PF	5%	50V
C394	1-164-473-11	CERAMIC CHIP	820PF	10%	50V
C395	1-164-473-11	CERAMIC CHIP	820PF	10%	50V
C396	1-164-473-11	CERAMIC CHIP	820PF	10%	50V
C397	1-164-473-11	CERAMIC CHIP	820PF	10%	50V
C454	1-162-970-11	CERAMIC CHIP	0.01uF	10%	25V
C466	1-162-970-11	CERAMIC CHIP	0.01uF	10%	25V
C467	1-162-970-11	CERAMIC CHIP	0.01uF	10%	25V
C468	1-128-004-11	ELECT CHIP	10uF	20%	16V
C502	1-162-964-11	CERAMIC CHIP	0.001uF	10%	50V
C503	1-124-778-00	ELECT CHIP	22uF	20%	6.3V
C504	1-107-826-11	CERAMIC CHIP	0.1uF	10%	16V
C506	1-162-964-11	CERAMIC CHIP	0.001uF	10%	50V
C507	1-162-959-11	CERAMIC CHIP	330PF	5%	50V
C510	1-107-826-11	CERAMIC CHIP	0.1uF	10%	16V
C511	1-162-925-11	CERAMIC CHIP	68PF	5%	50V
C512	1-162-968-11	CERAMIC CHIP	0.0047uF	10%	50V
C513	1-115-412-11	CERAMIC CHIP	680PF	5%	25V
C514	1-162-957-11	CERAMIC CHIP	220PF	5%	50V
C516	1-164-245-11	CERAMIC CHIP	0.015uF	10%	25V
C517	1-164-489-11	CERAMIC CHIP	0.22uF	10%	16V
C518	1-162-970-11	CERAMIC CHIP	0.01uF	10%	25V
C519	1-162-968-11	CERAMIC CHIP	0.0047uF	10%	50V
C520	1-162-968-11	CERAMIC CHIP	0.0047uF	10%	50V
C521	1-162-964-11	CERAMIC CHIP	0.001uF	10%	50V
C522	1-162-927-11	CERAMIC CHIP	100PF	5%	50V
C524	1-107-826-11	CERAMIC CHIP	0.1uF	10%	16V
C525	1-165-176-11	CERAMIC CHIP	0.047uF	10%	16V
C526	1-107-826-11	CERAMIC CHIP	0.1uF	10%	16V
C528	1-162-970-11	CERAMIC CHIP	0.01uF	10%	25V
C529	1-164-227-11	CERAMIC CHIP	0.022uF	10%	25V
C530	1-164-217-11	CERAMIC CHIP	150PF	5%	50V
C531	1-162-964-11	CERAMIC CHIP	0.001uF	10%	50V
C532	1-162-970-11	CERAMIC CHIP	0.01uF	10%	25V
C533	1-128-004-11	ELECT CHIP	10uF	20%	16V
C534	1-162-970-11	CERAMIC CHIP	0.01uF	10%	25V
C535	1-162-970-11	CERAMIC CHIP	0.01uF	10%	25V
C537	1-128-004-11	ELECT CHIP	10uF	20%	16V
C538	1-107-826-11	CERAMIC CHIP	0.1uF	10%	16V
C539	1-107-826-11	CERAMIC CHIP	0.1uF	10%	16V
C540	1-162-970-11	CERAMIC CHIP	0.01uF	10%	25V
C541	1-128-004-11	ELECT CHIP	10uF	20%	16V
C542	1-107-826-11	CERAMIC CHIP	0.1uF	10%	16V
C543	1-128-004-11	ELECT CHIP	10uF	20%	16V
C544	1-162-970-11	CERAMIC CHIP	0.01uF	10%	25V
C545	1-162-970-11	CERAMIC CHIP	0.01uF	10%	25V
C546	1-162-970-11	CERAMIC CHIP	0.01uF	10%	25V
C547	1-162-970-11	CERAMIC CHIP	0.01uF	10%	25V
C548	1-128-004-11	ELECT CHIP	10uF	20%	16V
C549	1-107-826-11	CERAMIC CHIP	0.1uF	10%	16V
C550	1-107-826-11	CERAMIC CHIP	0.1uF	10%	16V
C551	1-107-826-11	CERAMIC CHIP	0.1uF	10%	16V
C552	1-124-778-00	ELECT CHIP	22uF	20%	6.3V
C553	1-162-969-11	CERAMIC CHIP	0.0068uF	10%	25V
C554	1-162-969-11	CERAMIC CHIP	0.0068uF	10%	25V
C555	1-162-970-11	CERAMIC CHIP	0.01uF	10%	25V
C556	1-162-970-11	CERAMIC CHIP	0.01uF	10%	25V
C558	1-164-489-11	CERAMIC CHIP	0.22uF	10%	16V
C559	1-162-970-11	CERAMIC CHIP	0.01uF	10%	25V
C560	1-162-970-11	CERAMIC CHIP	0.01uF	10%	25V
C561	1-162-970-11	CERAMIC CHIP	0.01uF	10%	25V
C562	1-162-970-11	CERAMIC CHIP	0.01uF	10%	25V
C601	1-162-970-11	CERAMIC CHIP	0.01uF	10%	25V
C602	1-162-970-11	CERAMIC CHIP	0.01uF	10%	25V
C603	1-162-970-11	CERAMIC CHIP	0.01uF	10%	25V
C604	1-162-970-11	CERAMIC CHIP	0.01uF	10%	25V
C605	1-162-970-11	CERAMIC CHIP	0.01uF	10%	25V
C606	1-162-970-11	CERAMIC CHIP	0.01uF	10%	25V
C607	1-162-970-11	CERAMIC CHIP	0.01uF	10%	25V
C608	1-162-970-11	CERAMIC CHIP	0.01uF	10%	25V
C609	1-162-970-11	CERAMIC CHIP	0.01uF	10%	25V
C610	1-162-970-11	CERAMIC CHIP	0.01uF	10%	25V
C611	1-162-970-11	CERAMIC CHIP	0.01uF	10%	25V
C612	1-162-970-11	CERAMIC CHIP	0.01uF	10%	25V
C613	1-162-970-11	CERAMIC CHIP	0.01uF	10%	25V
C614	1-162-970-11	CERAMIC CHIP	0.01uF	10%	25V
C615	1-162-970-11	CERAMIC CHIP	0.01uF	10%	25V
C616	1-162-970-11	CERAMIC CHIP	0.01uF	10%	25V
C617	1-162-970-11	CERAMIC CHIP	0.01uF	10%	25V
C618	1-126-205-11	ELECT CHIP	47uF	20%	6.3V
C619	1-162-970-11	CERAMIC CHIP	0.01uF	10%	25V
C620	1-162-970-11	CERAMIC CHIP	0.01uF	10%	25V
C621	1-162-970-11	CERAMIC CHIP	0.01uF	10%	25V
C629	1-162-970-11	CERAMIC CHIP	0.01uF	10%	25V
C800	1-162-970-11	CERAMIC CHIP	0.01uF	10%	25V
C801	1-162-970-11	CERAMIC CHIP	0.01uF	10%	25V
C802	1-162-970-11	CERAMIC CHIP	0.01uF	10%	25V
C803	1-162-970-11	CERAMIC CHIP	0.01uF	10%	25V
C804	1-162-970-11	CERAMIC CHIP	0.01uF	10%	25V
C805	1-162-970-11	CERAMIC CHIP	0.01uF	10%	25V
C806	1-162-970-11	CERAMIC CHIP	0.01uF	10%	25V
C807	1-162-970-11	CERAMIC CHIP	0.01uF	10%	25V
C808	1-162-970-11	CERAMIC CHIP	0.01uF	10%	25V
C809	1-162-970-11	CERAMIC CHIP	0.01uF	10%	25V
C810	1-162-970-11	CERAMIC CHIP	0.01uF	10%	25V
C811	1-162-917-11	CERAMIC CHIP	15PF	5%	50V
C812	1-162-917-11	CERAMIC CHIP	15PF	5%	50V
C813	1-162-970-11	CERAMIC CHIP	0.01uF	10%	25V
C814	1-162-970-11	CERAMIC CHIP	0.01uF	10%	25V
C815	1-162-970-11	CERAMIC CHIP	0.01uF	10%	25V
C816	1-110-563-11	CERAMIC CHIP	0.068uF	10%	16V
C817	1-107-826-11	CERAMIC CHIP	0.1uF	10%	16V
C818	1-107-826-11	CERAMIC CHIP	0.1uF	10%	16V
C819	1-107-826-11	CERAMIC CHIP	0.1uF	10%	16V
C820	1-107-826-11	CERAMIC CHIP	0.1uF	10%	16V
C821	1-107-826-11	CERAMIC CHIP	0.1uF	10%	16V
C822	1-107-826-11	CERAMIC CHIP	0.1uF	10%	16V
C823	1-162-927-11	CERAMIC CHIP	100PF	5%	50V
C824	1-162-970-11	CERAMIC CHIP	0.01uF	10%	25V
C825	1-162-970-11	CERAMIC CHIP	0.01uF	10%	25V
C826	1-162-970-11	CERAMIC CHIP	0.01uF	10%	25V
C827	1-162-970-11	CERAMIC CHIP	0.01uF	10%	25V
C828	1-162-970-11	CERAMIC CHIP	0.01uF	10%	25V
C829	1-162-970-11	CERAMIC CHIP	0.01uF	10%	25V

Ref. No.	Part No.	Description	Remarks
C830	1-162-970-11	CERAMIC CHIP 0.01uF 10%	25V
C831	1-162-970-11	CERAMIC CHIP 0.01uF 10%	25V
C832	1-162-970-11	CERAMIC CHIP 0.01uF 10%	25V
C833	1-162-970-11	CERAMIC CHIP 0.01uF 10%	25V
C834	1-162-970-11	CERAMIC CHIP 0.01uF 10%	25V
C835	1-162-970-11	CERAMIC CHIP 0.01uF 10%	25V
C836	1-162-970-11	CERAMIC CHIP 0.01uF 10%	25V
C837	1-162-970-11	CERAMIC CHIP 0.01uF 10%	25V
C838	1-162-970-11	CERAMIC CHIP 0.01uF 10%	25V
C839	1-162-970-11	CERAMIC CHIP 0.01uF 10%	25V
C840	1-162-970-11	CERAMIC CHIP 0.01uF 10%	25V
C841	1-162-970-11	CERAMIC CHIP 0.01uF 10%	25V
C842	1-162-970-11	CERAMIC CHIP 0.01uF 10%	25V
C843	1-162-970-11	CERAMIC CHIP 0.01uF 10%	25V
C844	1-164-677-11	CERAMIC CHIP 0.033uF 10%	16V
C846	1-128-004-11	ELECT CHIP 10uF 20%	16V
C847	1-128-004-11	ELECT CHIP 10uF 20%	16V
C848	1-128-004-11	ELECT CHIP 10uF 20%	16V
C849	1-126-206-11	ELECT CHIP 100uF 20%	6.3V
C850	1-126-206-11	ELECT CHIP 100uF 20%	6.3V
C851	1-128-004-11	ELECT CHIP 10uF 20%	16V
C852	1-162-970-11	CERAMIC CHIP 0.01uF 10%	25V
C854	1-128-004-11	ELECT CHIP 10uF 20%	16V
C855	1-162-970-11	CERAMIC CHIP 0.01uF 10%	25V
C856	1-162-970-11	CERAMIC CHIP 0.01uF 10%	25V
C857	1-162-970-11	CERAMIC CHIP 0.01uF 10%	25V
C858	1-162-970-11	CERAMIC CHIP 0.01uF 10%	25V
C859	1-162-970-11	CERAMIC CHIP 0.01uF 10%	25V
C860	1-162-970-11	CERAMIC CHIP 0.01uF 10%	25V
C861	1-162-970-11	CERAMIC CHIP 0.01uF 10%	25V
C862	1-162-970-11	CERAMIC CHIP 0.01uF 10%	25V
C863	1-162-970-11	CERAMIC CHIP 0.01uF 10%	25V
C864	1-126-206-11	ELECT CHIP 100uF 20%	6.3V
C865	1-162-970-11	CERAMIC CHIP 0.01uF 10%	25V
		< CONNECTOR >	
CN001	1-778-768-21	PIN, CONNECTOR (PC BOARD) 8P	
CN002	1-784-687-41	PIN, CONNECTOR (PC BOARD) 7P	
CN101	1-774-769-11	CONNECTOR, FFC/FPC 25P	
CN252	1-774-769-11	CONNECTOR, FFC/FPC 25P	
CN301	1-784-684-11	CONNECTOR, FFC/FPC 8P	
CN302	1-784-326-11	CONNECTOR (FFC) 27P	
CN303	1-573-290-21	PIN, CONNECTOR (1.5MM) (SMD)4P	
CN361	1-784-688-21	PIN, CONNECTOR (PC BOARD) 2P	
CN451	1-573-768-21	PIN, CONNECTOR (1.5MM) (SMD)5P	
CN452	1-784-326-11	CONNECTOR (FFC) 27P	
CN601	1-784-685-11	CONNECTOR, FFC/FPC 20P	
CN801	1-573-806-21	PIN, CONNECTOR (1.5MM) (SMD)6P	
		< TRIMMER >	
CT201	1-141-422-11	CAP, ADJ 10PF	
		< DIODE >	
D002	8-719-975-40	DIODE RB411D	
D101	8-719-988-62	DIODE 1SS355	
D102	8-719-988-62	DIODE 1SS355	
D103	8-719-988-62	DIODE 1SS355	
D502	8-719-988-62	DIODE 1SS355	

Ref. No.	Part No.	Description	Remarks
D801	8-719-988-62	DIODE 1SS355	
D802	8-719-048-98	DIODE RB160L-40TE25	
		< FUSE >	
⚠F001	1-533-771-21	FUSE (SMD) 0.8A	
⚠F002	1-533-771-21	FUSE (SMD) 0.8A	
⚠F003	1-533-771-21	FUSE (SMD) 0.8A	
⚠F004	1-533-771-21	FUSE (SMD) 0.8A	
⚠F005	1-533-710-11	FUSE (SMD) 1.6A	
⚠F006	1-533-710-11	FUSE (SMD) 1.6A	
⚠F301	1-533-855-21	FUSE (SMD) 125mA	
⚠F302	1-533-855-21	FUSE (SMD) 125mA	
		< FERRITE BEAD >	
FB201	1-500-283-11	INDUCTOR CHIP 0UH	
FB601	1-414-553-11	INDUCTOR 0UH	
FB602	1-414-553-11	INDUCTOR 0UH	
* FB603	1-500-449-21	FERRITE 0UH	
FB604	1-414-553-11	INDUCTOR 0UH	
FB605	1-414-553-11	INDUCTOR 0UH	
FB606	1-414-553-11	INDUCTOR 0UH	
FB607	1-414-553-11	INDUCTOR 0UH	
FB608	1-414-553-11	INDUCTOR 0UH	
FB609	1-414-553-11	INDUCTOR 0UH	
FB611	1-414-553-11	INDUCTOR 0UH	
* FB704	1-500-449-21	FERRITE 0UH	
* FB705	1-500-449-21	FERRITE 0UH	
* FB706	1-500-449-21	FERRITE 0UH	
* FB707	1-500-449-21	FERRITE 0UH	
* FB708	1-500-449-21	FERRITE 0UH	
* FB710	1-500-449-21	FERRITE 0UH	
* FB711	1-500-449-21	FERRITE 0UH	
* FB712	1-500-449-21	FERRITE 0UH	
* FB713	1-500-449-21	FERRITE 0UH	
* FB714	1-500-449-21	FERRITE 0UH	
* FB715	1-500-449-21	FERRITE 0UH	
* FB801	1-500-449-21	FERRITE 0UH	
* FB802	1-500-449-21	FERRITE 0UH	
FB803	1-500-283-11	INDUCTOR CHIP 0UH	
		< FILTER >	
FL001	1-233-893-21	FILTER, CHIP EMI	
FL002	1-233-893-21	FILTER, CHIP EMI	
FL003	1-233-893-21	FILTER, CHIP EMI	
FL004	1-233-893-21	FILTER, CHIP EMI	
FL005	1-233-893-21	FILTER, CHIP EMI	
FL006	1-233-893-21	FILTER, CHIP EMI	
FL007	1-233-893-21	FILTER, CHIP EMI	
FL008	1-233-893-21	FILTER, CHIP EMI	
FL201	1-233-893-21	FILTER, CHIP EMI	
FL202	1-233-893-21	FILTER, CHIP EMI	
FL204	1-239-400-11	FILTER, CHIP EMI	
FL205	1-239-400-11	FILTER, CHIP EMI	
FL207	1-239-400-11	FILTER, CHIP EMI	
FL208	1-233-893-21	FILTER, CHIP EMI	
FL209	1-239-400-11	FILTER, CHIP EMI	

Note : The components identified by mark ⚠ or dotted line with mark ⚠ are critical for safety.
Replace only with part number specified.

Ref. No.	Part No.	Description	Remarks
FL210	1-239-400-11	FILTER, CHIP EMI	
FL211	1-233-893-21	FILTER, CHIP EMI	
FL212	1-233-893-21	FILTER, CHIP EMI	
FL213	1-239-400-11	FILTER, CHIP EMI	
FL251	1-233-893-21	FILTER, CHIP EMI	
FL252	1-233-893-21	FILTER, CHIP EMI	
FL254	1-233-893-21	FILTER, CHIP EMI	
FL501	1-233-893-21	FILTER, CHIP EMI	
FL502	1-233-893-21	FILTER, CHIP EMI	
FL601	1-233-893-21	FILTER, CHIP EMI	
FL801	1-233-893-21	FILTER, CHIP EMI	
FL802	1-233-893-21	FILTER, CHIP EMI	
FL803	1-233-893-21	FILTER, CHIP EMI	
FL804	1-233-893-21	FILTER, CHIP EMI	
FL805	1-233-893-21	FILTER, CHIP EMI	
FL806	1-233-893-21	FILTER, CHIP EMI	
FL807	1-233-893-21	FILTER, CHIP EMI	
FL808	1-233-893-21	FILTER, CHIP EMI	
		< IC >	
IC201	8-759-463-47	IC MB811171622A-100FN	
IC202	8-759-463-47	IC MB811171622A-100FN	
IC203	8-759-526-71	IC L64020-D-QC-27	
IC204	8-759-531-92	IC TC7WH04FU(TE12R)	
IC205	8-759-456-81	IC SN74ABT126DB-E20	
IC206	8-759-456-81	IC SN74ABT126DB-E20	
IC207	8-759-522-15	IC MB90096PF-G-123-BND-ER (EXCEPT HK)	
IC207	8-759-522-16	IC MB90096PF-G-124-BND-ER (HK)	
IC208	8-759-058-62	IC TC7S08FU(TE85R)	
IC209	8-759-522-10	IC CXD8696R-T2	
IC251	8-752-384-09	IC CXD1854Q	
IC252	8-752-379-07	IC CXD1914Q	
IC301	8-759-701-39	IC NJM3404AM	
IC302	8-759-384-55	IC LA6527N-TE-B	
IC303	8-759-333-63	IC LB1896-TE-B	
IC361	8-759-490-71	IC BA5912AFP-YE2	
IC363	8-759-522-13	IC BA5981FP-E2	
IC452	8-759-441-31	IC MC14053BDTR2	
IC455	8-759-100-93	IC uPC393G2	
IC501	8-759-100-93	IC uPC393G2	
IC502	8-759-701-36	IC NJM3403AM(TE2)	
IC503	8-759-701-36	IC NJM3403AM(TE2)	
IC506	8-759-525-61	IC CXD8730R	
IC507	8-759-701-39	IC NJM3404AM	
IC508	8-759-701-39	IC NJM3404AM	
IC601	8-759-926-66	IC SN74HC373ANS	
IC602	8-759-082-55	IC TC7W00FU(TE12R)	
IC603	8-759-536-33	IC MSM27C401CZ-NTS-K	
IC604	8-759-426-60	IC MB90T678PF-G-BND	
IC605	8-759-434-20	IC PST572DML	
IC606	8-759-100-93	IC uPC393G2	
IC801	8-759-431-99	IC BR9020F-E2	
IC802	8-759-526-77	IC HM628128ALFP-5SL	
IC803	8-759-451-71	IC MBM29F800B-90PF	
IC804	8-759-525-66	IC CXD8728Q	
IC805	8-759-489-89	IC HD6437034AD49F	
IC806	8-759-522-09	IC CXD1865R	
IC807	8-759-526-79	IC CXD8747Q	
IC810	8-759-525-65	IC uPD424260ALG5-A70-7JF	
IC811	8-752-390-59	IC CXD1904Q	

Ref. No.	Part No.	Description			Remarks
IC812	8-759-486-55	IC NJM2370U33-TE2			
		< IC SOCKET >			
* ICS803	1-251-496-21	SOCKET, IC			
		< COIL >			
L001	1-409-529-41	INDUCTOR	0uH		
L002	1-409-529-41	INDUCTOR	0uH		
L004	1-409-529-41	INDUCTOR	0uH		
L005	1-409-529-41	INDUCTOR	0uH		
L006	1-409-529-41	INDUCTOR	0uH		
L007	1-409-529-41	INDUCTOR	0uH		
L205	1-414-751-11	INDUCTOR	1uH		
		< TRANSISTOR >			
Q001	8-729-230-63	TRANSISTOR	2SC4116-YG		
Q002	8-729-044-78	TRANSISTOR	2SJ327-Z-E1		
Q371	8-729-015-76	TRANSISTOR	UN5211-TX		
Q372	8-729-015-76	TRANSISTOR	UN5211-TX		
Q452	8-729-023-22	TRANSISTOR	2SD2114KT146		
Q501	8-729-015-76	TRANSISTOR	UN5211-TX		
		< RESISTOR >			
R001	1-216-827-11	METAL CHIP	3.3K	5%	1/16W
R004	1-216-820-11	METAL CHIP	820	5%	1/16W
R005	1-216-837-11	METAL CHIP	22K	5%	1/16W
R008	1-216-833-11	METAL CHIP	10K	5%	1/16W
R009	1-216-821-11	METAL CHIP	1K	5%	1/16W
R021	1-216-864-11	METAL CHIP	0	5%	1/16W
R024	1-216-864-11	METAL CHIP	0	5%	1/16W
R029	1-216-864-11	METAL CHIP	0	5%	1/16W (CN)
R030	1-216-864-11	METAL CHIP	0	5%	1/16W (HK)
R031	1-216-864-11	METAL CHIP	0	5%	1/16W (E,SP)
R051	1-218-831-11	RES,CHIP	220	0.50%	1/16W
R052	1-218-831-11	RES,CHIP	220	0.50%	1/16W
R053	1-218-831-11	RES,CHIP	220	0.50%	1/16W
R054	1-218-831-11	RES,CHIP	220	0.50%	1/16W
R055	1-218-831-11	RES,CHIP	220	0.50%	1/16W
R056	1-218-831-11	RES,CHIP	220	0.50%	1/16W
R057	1-216-805-11	METAL CHIP	47	5%	1/16W
R138	1-216-864-11	METAL CHIP	0	5%	1/16W
R139	1-216-864-11	METAL CHIP	0	5%	1/16W
R144	1-216-864-11	METAL CHIP	0	5%	1/16W
R145	1-216-864-11	METAL CHIP	0	5%	1/16W
R146	1-216-864-11	METAL CHIP	0	5%	1/16W
R148	1-216-864-11	METAL CHIP	0	5%	1/16W
R149	1-216-864-11	METAL CHIP	0	5%	1/16W
R150	1-216-864-11	METAL CHIP	0	5%	1/16W
R151	1-216-864-11	METAL CHIP	0	5%	1/16W
R152	1-216-833-11	METAL CHIP	10K	5%	1/16W
R153	1-216-864-11	METAL CHIP	0	5%	1/16W
R155	1-216-864-11	METAL CHIP	0	5%	1/16W
R156	1-216-864-11	METAL CHIP	0	5%	1/16W

Note : The components identified by mark ⚠ or dotted line with mark ⚠ are critical for safety.
Replace only with part number specified.

Ref. No.	Part No.	Description			Remarks
R157	1-216-864-11	METAL CHIP	0	5%	1/16W
R158	1-216-864-11	METAL CHIP	0	5%	1/16W
R159	1-216-864-11	METAL CHIP	0	5%	1/16W
R160	1-216-864-11	METAL CHIP	0	5%	1/16W
R161	1-216-864-11	METAL CHIP	0	5%	1/16W
R162	1-216-864-11	METAL CHIP	0	5%	1/16W
R163	1-216-864-11	METAL CHIP	0	5%	1/16W
R164	1-216-864-11	METAL CHIP	0	5%	1/16W
R165	1-216-864-11	METAL CHIP	0	5%	1/16W
R166	1-216-864-11	METAL CHIP	0	5%	1/16W
R167	1-216-864-11	METAL CHIP	0	5%	1/16W
R168	1-216-864-11	METAL CHIP	0	5%	1/16W
R169	1-216-864-11	METAL CHIP	0	5%	1/16W
R170	1-216-864-11	METAL CHIP	0	5%	1/16W
R171	1-216-864-11	METAL CHIP	0	5%	1/16W
R172	1-216-864-11	METAL CHIP	0	5%	1/16W
R173	1-216-864-11	METAL CHIP	0	5%	1/16W
R174	1-216-864-11	METAL CHIP	0	5%	1/16W
R175	1-216-864-11	METAL CHIP	0	5%	1/16W
R176	1-216-832-11	METAL CHIP	8.2K	5%	1/16W
R177	1-216-829-11	METAL CHIP	4.7K	5%	1/16W
R178	1-216-825-11	METAL CHIP	2.2K	5%	1/16W
R179	1-216-809-11	METAL CHIP	100	5%	1/16W
R180	1-216-864-11	METAL CHIP	0	5%	1/16W
R181	1-216-864-11	METAL CHIP	0	5%	1/16W
R194	1-216-805-11	METAL CHIP	47	5%	1/16W
R195	1-216-805-11	METAL CHIP	47	5%	1/16W
R196	1-216-805-11	METAL CHIP	47	5%	1/16W
R197	1-216-805-11	METAL CHIP	47	5%	1/16W
R198	1-216-805-11	METAL CHIP	47	5%	1/16W
R199	1-216-805-11	METAL CHIP	47	5%	1/16W
R200	1-216-801-11	METAL CHIP	22	5%	1/16W
R202	1-216-805-11	METAL CHIP	47	5%	1/16W
R203	1-216-805-11	METAL CHIP	47	5%	1/16W
R204	1-216-805-11	METAL CHIP	47	5%	1/16W
R205	1-216-864-11	METAL CHIP	0	5%	1/16W
R207	1-216-805-11	METAL CHIP	47	5%	1/16W
R208	1-216-805-11	METAL CHIP	47	5%	1/16W
R209	1-216-805-11	METAL CHIP	47	5%	1/16W
R210	1-216-805-11	METAL CHIP	47	5%	1/16W
R211	1-216-805-11	METAL CHIP	47	5%	1/16W
R212	1-216-809-11	METAL CHIP	100	5%	1/16W
R213	1-216-809-11	METAL CHIP	100	5%	1/16W
R214	1-216-805-11	METAL CHIP	47	5%	1/16W
R215	1-216-805-11	METAL CHIP	47	5%	1/16W
R216	1-216-805-11	METAL CHIP	47	5%	1/16W
R218	1-216-805-11	METAL CHIP	47	5%	1/16W
R219	1-216-801-11	METAL CHIP	22	5%	1/16W
R220	1-216-801-11	METAL CHIP	22	5%	1/16W
R221	1-216-801-11	METAL CHIP	22	5%	1/16W
R222	1-216-805-11	METAL CHIP	47	5%	1/16W
R223	1-216-805-11	METAL CHIP	47	5%	1/16W
R224	1-216-805-11	METAL CHIP	47	5%	1/16W
R225	1-216-805-11	METAL CHIP	47	5%	1/16W
R226	1-216-805-11	METAL CHIP	47	5%	1/16W
R227	1-216-805-11	METAL CHIP	47	5%	1/16W
R228	1-216-805-11	METAL CHIP	47	5%	1/16W
R230	1-216-809-11	METAL CHIP	100	5%	1/16W
R231	1-216-809-11	METAL CHIP	100	5%	1/16W
R232	1-216-845-11	METAL CHIP	100K	5%	1/16W

Ref. No.	Part No.	Description			Remarks
R235	1-216-864-11	METAL CHIP	0	5%	1/16W
R236	1-216-809-11	METAL CHIP	100	5%	1/16W
R237	1-216-809-11	METAL CHIP	100	5%	1/16W
R238	1-216-809-11	METAL CHIP	100	5%	1/16W
R239	1-216-809-11	METAL CHIP	100	5%	1/16W
R240	1-216-805-11	METAL CHIP	47	5%	1/16W
R241	1-216-805-11	METAL CHIP	47	5%	1/16W
R242	1-216-864-11	METAL CHIP	0	5%	1/16W
R243	1-216-801-11	METAL CHIP	22	5%	1/16W
R244	1-216-809-11	METAL CHIP	100	5%	1/16W
R245	1-216-864-11	METAL CHIP	0	5%	1/16W
R246	1-216-864-11	METAL CHIP	0	5%	1/16W
R247	1-216-864-11	METAL CHIP	0	5%	1/16W
R248	1-216-864-11	METAL CHIP	0	5%	1/16W
R249	1-216-864-11	METAL CHIP	0	5%	1/16W
R250	1-216-809-11	METAL CHIP	100	5%	1/16W
R251	1-216-809-11	METAL CHIP	100	5%	1/16W
R252	1-216-821-11	METAL CHIP	1K	5%	1/16W
R253	1-216-801-11	METAL CHIP	22	5%	1/16W
R254	1-216-805-11	METAL CHIP	47	5%	1/16W
R255	1-216-805-11	METAL CHIP	47	5%	1/16W
R256	1-216-805-11	METAL CHIP	47	5%	1/16W
R257	1-216-805-11	METAL CHIP	47	5%	1/16W
R258	1-216-805-11	METAL CHIP	47	5%	1/16W
R259	1-216-805-11	METAL CHIP	47	5%	1/16W
R260	1-216-805-11	METAL CHIP	47	5%	1/16W
R261	1-216-805-11	METAL CHIP	47	5%	1/16W
R262	1-216-805-11	METAL CHIP	47	5%	1/16W
R263	1-216-805-11	METAL CHIP	47	5%	1/16W
R264	1-216-805-11	METAL CHIP	47	5%	1/16W
R265	1-216-805-11	METAL CHIP	47	5%	1/16W
R266	1-216-805-11	METAL CHIP	47	5%	1/16W
R267	1-216-805-11	METAL CHIP	47	5%	1/16W
R268	1-216-805-11	METAL CHIP	47	5%	1/16W
R269	1-216-805-11	METAL CHIP	47	5%	1/16W
R270	1-216-821-11	METAL CHIP	1K	5%	1/16W
R279	1-216-801-11	METAL CHIP	22	5%	1/16W
R280	1-216-809-11	METAL CHIP	100	5%	1/16W
R281	1-216-801-11	METAL CHIP	22	5%	1/16W
R282	1-216-801-11	METAL CHIP	22	5%	1/16W
R283	1-216-805-11	METAL CHIP	47	5%	1/16W
R284	1-216-805-11	METAL CHIP	47	5%	1/16W
R285	1-216-805-11	METAL CHIP	47	5%	1/16W
R286	1-216-827-11	METAL CHIP	3.3K	5%	1/16W
R290	1-216-829-11	METAL CHIP	4.7K	5%	1/16W
R291	1-216-805-11	METAL CHIP	47	5%	1/16W
R296	1-216-809-11	METAL CHIP	100	5%	1/16W
R298	1-216-809-11	METAL CHIP	100	5%	1/16W
R301	1-216-833-11	METAL CHIP	10K	5%	1/16W
R302	1-216-845-11	METAL CHIP	100K	5%	1/16W
R304	1-216-841-11	METAL CHIP	47K	5%	1/16W
R305	1-216-839-11	METAL CHIP	33K	5%	1/16W
R306	1-216-833-11	METAL CHIP	10K	5%	1/16W
R307	1-216-853-11	METAL CHIP	470K	5%	1/16W
R308	1-216-845-11	METAL CHIP	100K	5%	1/16W
R309	1-216-833-11	METAL CHIP	10K	5%	1/16W
R313	1-216-833-11	METAL CHIP	10K	5%	1/16W
R314	1-216-821-11	METAL CHIP	1K	5%	1/16W
R315	1-216-837-11	METAL CHIP	22K	5%	1/16W
R316	1-216-818-11	METAL CHIP	560	5%	1/16W

MB-78

Ref. No.	Part No.	Description			Remarks
R317	1-216-843-11	METAL CHIP	68K	5%	1/16W
R318	1-216-817-11	METAL CHIP	470	5%	1/16W
R319	1-216-851-11	METAL CHIP	330K	5%	1/16W
R320	1-216-817-11	METAL CHIP	470	5%	1/16W
R321	1-216-845-11	METAL CHIP	100K	5%	1/16W
R322	1-218-851-11	RES,CHIP	1.5K	0.50%	1/16W
R324	1-216-817-11	METAL CHIP	470	5%	1/16W
R325	1-216-821-11	METAL CHIP	1K	5%	1/16W
R326	1-216-821-11	METAL CHIP	1K	5%	1/16W
R327	1-216-821-11	METAL CHIP	1K	5%	1/16W
R328	1-216-821-11	METAL CHIP	1K	5%	1/16W
R329	1-216-855-11	METAL CHIP	680K	5%	1/16W
R331	1-216-821-11	METAL CHIP	1K	5%	1/16W
R332	1-218-871-11	RES,CHIP	10K	0.50%	1/16W
R333	1-216-864-11	METAL CHIP	0	5%	1/16W
R334	1-216-821-11	METAL CHIP	1K	5%	1/16W
R335	1-216-849-11	METAL CHIP	220K	5%	1/16W
R336	1-216-849-11	METAL CHIP	220K	5%	1/16W
R338	1-216-845-11	METAL CHIP	100K	5%	1/16W
R339	1-218-859-11	RES,CHIP	3.3K	0.50%	1/16W
R340	1-218-855-11	RES,CHIP	2.2K	0.50%	1/16W
R341	1-216-789-11	METAL CHIP	2.2	5%	1/16W
R342	1-216-789-11	METAL CHIP	2.2	5%	1/16W
R343	1-216-789-11	METAL CHIP	2.2	5%	1/16W
R344	1-216-789-11	METAL CHIP	2.2	5%	1/16W
R345	1-216-797-11	METAL CHIP	10	5%	1/16W
R346	1-216-798-11	RES,CHIP	12	5%	1/16W
R347	1-218-859-11	RES,CHIP	3.3K	0.50%	1/16W
R348	1-218-863-11	RES,CHIP	4.7K	0.50%	1/16W
R349	1-218-859-11	RES,CHIP	3.3K	0.50%	1/16W
R350	1-218-863-11	RES,CHIP	4.7K	0.50%	1/16W
R351	1-216-797-11	METAL CHIP	10	5%	1/16W
R352	1-216-798-11	RES,CHIP	12	5%	1/16W
R353	1-216-798-11	RES,CHIP	12	5%	1/16W
R354	1-216-821-11	METAL CHIP	1K	5%	1/16W
R355	1-216-823-11	METAL CHIP	1.5K	5%	1/16W
R356	1-216-833-11	METAL CHIP	10K	5%	1/16W
R357	1-216-837-11	METAL CHIP	22K	5%	1/16W
R360	1-216-817-11	METAL CHIP	470	5%	1/16W
R361	1-216-864-11	METAL CHIP	0	5%	1/16W
R362	1-216-833-11	METAL CHIP	10K	5%	1/16W
R363	1-216-833-11	METAL CHIP	10K	5%	1/16W
R365	1-216-841-11	METAL CHIP	47K	5%	1/16W
R366	1-216-833-11	METAL CHIP	10K	5%	1/16W
R367	1-216-841-11	METAL CHIP	47K	5%	1/16W
R368	1-216-837-11	METAL CHIP	22K	5%	1/16W
R369	1-216-833-11	METAL CHIP	10K	5%	1/16W
R371	1-216-864-11	METAL CHIP	0	5%	1/16W
R372	1-216-864-11	METAL CHIP	0	5%	1/16W
R375	1-216-797-11	METAL CHIP	10	5%	1/16W
R376	1-216-797-11	METAL CHIP	10	5%	1/16W
R377	1-216-797-11	METAL CHIP	10	5%	1/16W
R378	1-216-797-11	METAL CHIP	10	5%	1/16W
R385	1-216-864-11	METAL CHIP	0	5%	1/16W
R386	1-216-864-11	METAL CHIP	0	5%	1/16W
R387	1-216-864-11	METAL CHIP	0	5%	1/16W
R388	1-216-864-11	METAL CHIP	0	5%	1/16W
R393	1-216-797-11	METAL CHIP	10	5%	1/16W
R394	1-216-797-11	METAL CHIP	10	5%	1/16W
R395	1-216-797-11	METAL CHIP	10	5%	1/16W
R396	1-216-797-11	METAL CHIP	10	5%	1/16W
R397	1-216-837-11	METAL CHIP	22K	5%	1/16W
R398	1-216-837-11	METAL CHIP	22K	5%	1/16W
R399	1-216-797-11	METAL CHIP	10	5%	1/16W
R400	1-216-797-11	METAL CHIP	10	5%	1/16W
R401	1-216-797-11	METAL CHIP	10	5%	1/16W
R402	1-216-797-11	METAL CHIP	10	5%	1/16W
R403	1-218-446-11	METAL CHIP	1	5%	1/16W
R404	1-218-446-11	METAL CHIP	1	5%	1/16W
R405	1-218-446-11	METAL CHIP	1	5%	1/16W
R406	1-218-446-11	METAL CHIP	1	5%	1/16W
R407	1-216-134-00	METAL CHIP	2.2	5%	1/8W
R408	1-216-134-00	METAL CHIP	2.2	5%	1/8W
R409	1-216-134-00	METAL CHIP	2.2	5%	1/8W
R410	1-216-134-00	METAL CHIP	2.2	5%	1/8W
R411	1-216-835-11	METAL CHIP	15K	5%	1/16W
R412	1-216-835-11	METAL CHIP	15K	5%	1/16W
R413	1-216-844-11	METAL CHIP	82K	5%	1/16W
R414	1-216-844-11	METAL CHIP	82K	5%	1/16W
R415	1-216-837-11	METAL CHIP	22K	5%	1/16W
R416	1-216-837-11	METAL CHIP	22K	5%	1/16W
R417	1-216-833-11	METAL CHIP	10K	5%	1/16W
R418	1-216-833-11	METAL CHIP	10K	5%	1/16W
R419	1-216-838-11	METAL CHIP	27K	5%	1/16W
R420	1-216-829-11	METAL CHIP	4.7K	5%	1/16W
R421	1-216-836-11	METAL CHIP	18K	5%	1/16W
R422	1-216-836-11	METAL CHIP	18K	5%	1/16W
R423	1-216-833-11	METAL CHIP	10K	5%	1/16W
R424	1-216-841-11	METAL CHIP	47K	5%	1/16W
R425	1-216-825-11	METAL CHIP	2.2K	5%	1/16W
R426	1-216-825-11	METAL CHIP	2.2K	5%	1/16W
R427	1-216-825-11	METAL CHIP	2.2K	5%	1/16W
R428	1-216-825-11	METAL CHIP	2.2K	5%	1/16W
R459	1-216-864-11	METAL CHIP	0	5%	1/16W
R460	1-216-809-11	METAL CHIP	100	5%	1/16W
R486	1-216-821-11	METAL CHIP	1K	5%	1/16W
R487	1-216-821-11	METAL CHIP	1K	5%	1/16W
R488	1-216-857-11	METAL CHIP	1M	5%	1/16W
R489	1-216-819-11	METAL CHIP	680	5%	1/16W
R490	1-216-839-11	METAL CHIP	33K	5%	1/16W
R491	1-216-833-11	METAL CHIP	10K	5%	1/16W
R492	1-216-839-11	METAL CHIP	33K	5%	1/16W
R493	1-216-833-11	METAL CHIP	10K	5%	1/16W
R494	1-216-819-11	METAL CHIP	680	5%	1/16W
R495	1-216-857-11	METAL CHIP	1M	5%	1/16W
R501	1-216-831-11	METAL CHIP	6.8K	5%	1/16W
R503	1-216-825-11	METAL CHIP	2.2K	5%	1/16W
R508	1-216-829-11	METAL CHIP	4.7K	5%	1/16W
R509	1-216-833-11	METAL CHIP	10K	5%	1/16W
R510	1-216-821-11	METAL CHIP	1K	5%	1/16W
R511	1-216-833-11	METAL CHIP	10K	5%	1/16W
R512	1-216-833-11	METAL CHIP	10K	5%	1/16W
R514	1-216-864-11	METAL CHIP	0	5%	1/16W
R515	1-216-809-11	METAL CHIP	100	5%	1/16W
R516	1-216-837-11	METAL CHIP	22K	5%	1/16W
R517	1-216-825-11	METAL CHIP	2.2K	5%	1/16W
R518	1-216-864-11	METAL CHIP	0	5%	1/16W
R519	1-216-825-11	METAL CHIP	2.2K	5%	1/16W
R520	1-216-825-11	METAL CHIP	2.2K	5%	1/16W
R521	1-216-821-11	METAL CHIP	1K	5%	1/16W

Ref. No.	Part No.	Description			Remarks
R522	1-216-821-11	METAL CHIP	1K	5%	1/16W
R523	1-216-846-11	METAL CHIP	120K	5%	1/16W
R524	1-216-833-11	METAL CHIP	10K	5%	1/16W
R525	1-216-809-11	METAL CHIP	100	5%	1/16W
R526	1-216-825-11	METAL CHIP	2.2K	5%	1/16W
R527	1-216-825-11	METAL CHIP	2.2K	5%	1/16W
R528	1-216-825-11	METAL CHIP	2.2K	5%	1/16W
R529	1-216-834-11	METAL CHIP	12K	5%	1/16W
R530	1-216-837-11	METAL CHIP	22K	5%	1/16W
R531	1-216-833-11	METAL CHIP	10K	5%	1/16W
R532	1-216-833-11	METAL CHIP	10K	5%	1/16W
R533	1-216-845-11	METAL CHIP	100K	5%	1/16W
R534	1-216-833-11	METAL CHIP	10K	5%	1/16W
R535	1-216-829-11	METAL CHIP	4.7K	5%	1/16W
R536	1-216-845-11	METAL CHIP	100K	5%	1/16W
R537	1-216-845-11	METAL CHIP	100K	5%	1/16W
R539	1-216-864-11	METAL CHIP	0	5%	1/16W
R540	1-216-864-11	METAL CHIP	0	5%	1/16W
R541	1-216-845-11	METAL CHIP	100K	5%	1/16W
R542	1-216-841-11	METAL CHIP	47K	5%	1/16W
R543	1-216-821-11	METAL CHIP	1K	5%	1/16W
R544	1-216-827-11	METAL CHIP	3.3K	5%	1/16W
R545	1-218-847-11	RES,CHIP	1K	0.50%	1/16W
R546	1-216-797-11	METAL CHIP	10	5%	1/16W
R547	1-216-797-11	METAL CHIP	10	5%	1/16W
R548	1-216-864-11	METAL CHIP	0	5%	1/16W
R550	1-216-809-11	METAL CHIP	100	5%	1/16W
R551	1-218-847-11	RES,CHIP	1K	0.50%	1/16W
R552	1-216-809-11	METAL CHIP	100	5%	1/16W
R553	1-216-809-11	METAL CHIP	100	5%	1/16W
R554	1-216-809-11	METAL CHIP	100	5%	1/16W
R555	1-216-809-11	METAL CHIP	100	5%	1/16W
R556	1-216-829-11	METAL CHIP	4.7K	5%	1/16W
R557	1-216-809-11	METAL CHIP	100	5%	1/16W
R558	1-216-829-11	METAL CHIP	4.7K	5%	1/16W
R559	1-216-809-11	METAL CHIP	100	5%	1/16W
R560	1-218-847-11	RES,CHIP	1K	0.50%	1/16W
R561	1-216-837-11	METAL CHIP	22K	5%	1/16W
R562	1-216-864-11	METAL CHIP	0	5%	1/16W
R563	1-216-833-11	METAL CHIP	10K	5%	1/16W
R564	1-216-827-11	METAL CHIP	3.3K	5%	1/16W
R565	1-216-833-11	METAL CHIP	10K	5%	1/16W
R566	1-216-827-11	METAL CHIP	3.3K	5%	1/16W
R567	1-216-809-11	METAL CHIP	100	5%	1/16W
R568	1-216-809-11	METAL CHIP	100	5%	1/16W
R569	1-216-809-11	METAL CHIP	100	5%	1/16W
R570	1-216-809-11	METAL CHIP	100	5%	1/16W
R571	1-216-809-11	METAL CHIP	100	5%	1/16W
R572	1-216-809-11	METAL CHIP	100	5%	1/16W
R573	1-216-809-11	METAL CHIP	100	5%	1/16W
R574	1-216-809-11	METAL CHIP	100	5%	1/16W
R575	1-216-821-11	METAL CHIP	1K	5%	1/16W
R576	1-216-853-11	METAL CHIP	470K	5%	1/16W
R577	1-216-853-11	METAL CHIP	470K	5%	1/16W
R578	1-218-847-11	RES,CHIP	1K	0.50%	1/16W
R579	1-216-835-11	METAL CHIP	15K	5%	1/16W
R580	1-216-809-11	METAL CHIP	100	5%	1/16W
R582	1-216-864-11	METAL CHIP	0	5%	1/16W
R583	1-216-809-11	METAL CHIP	100	5%	1/16W
R584	1-216-809-11	METAL CHIP	100	5%	1/16W

Ref. No.	Part No.	Description			Remarks
R585	1-216-821-11	METAL CHIP	1K	5%	1/16W
R586	1-216-833-11	METAL CHIP	10K	5%	1/16W
R587	1-216-809-11	METAL CHIP	100	5%	1/16W
R588	1-216-809-11	METAL CHIP	100	5%	1/16W
R592	1-216-845-11	METAL CHIP	100K	5%	1/16W
R593	1-216-835-11	METAL CHIP	15K	5%	1/16W
R594	1-216-857-11	METAL CHIP	1M	5%	1/16W
R595	1-216-833-11	METAL CHIP	10K	5%	1/16W
R596	1-216-839-11	METAL CHIP	33K	5%	1/16W
R597	1-216-827-11	METAL CHIP	3.3K	5%	1/16W
R598	1-216-821-11	METAL CHIP	1K	5%	1/16W
R601	1-216-833-11	METAL CHIP	10K	5%	1/16W
R602	1-216-833-11	METAL CHIP	10K	5%	1/16W
R605	1-216-845-11	METAL CHIP	100K	5%	1/16W
R607	1-216-833-11	METAL CHIP	10K	5%	1/16W
R610	1-216-833-11	METAL CHIP	10K	5%	1/16W
R612	1-216-864-11	METAL CHIP	0	5%	1/16W
R613	1-216-833-11	METAL CHIP	10K	5%	1/16W
R614	1-216-833-11	METAL CHIP	10K	5%	1/16W
R615	1-216-833-11	METAL CHIP	10K	5%	1/16W
R616	1-218-871-11	RES,CHIP	10K	0.50%	1/16W
R617	1-218-871-11	RES,CHIP	10K	0.50%	1/16W
R618	1-218-871-11	RES,CHIP	10K	0.50%	1/16W
R619	1-218-871-11	RES,CHIP	10K	0.50%	1/16W
R620	1-218-871-11	RES,CHIP	10K	0.50%	1/16W
R622	1-216-864-11	METAL CHIP	0	5%	1/16W
R626	1-218-871-11	RES,CHIP	10K	0.50%	1/16W
R628	1-216-864-11	METAL CHIP	0	5%	1/16W
R630	1-216-821-11	METAL CHIP	1K	5%	1/16W
R631	1-216-821-11	METAL CHIP	1K	5%	1/16W
R632	1-216-833-11	METAL CHIP	10K	5%	1/16W
R633	1-216-809-11	METAL CHIP	100	5%	1/16W
R635	1-216-809-11	METAL CHIP	100	5%	1/16W
R636	1-216-821-11	METAL CHIP	1K	5%	1/16W
R637	1-216-833-11	METAL CHIP	10K	5%	1/16W (EXCEPT HK)
R638	1-216-833-11	METAL CHIP	10K	5%	1/16W
R639	1-216-833-11	METAL CHIP	10K	5%	1/16W
R640	1-216-833-11	METAL CHIP	10K	5%	1/16W
R641	1-216-833-11	METAL CHIP	10K	5%	1/16W
R642	1-216-833-11	METAL CHIP	10K	5%	1/16W
R643	1-216-833-11	METAL CHIP	10K	5%	1/16W
R644	1-216-833-11	METAL CHIP	10K	5%	1/16W
R645	1-216-833-11	METAL CHIP	10K	5%	1/16W
R646	1-216-833-11	METAL CHIP	10K	5%	1/16W (CN)
R647	1-216-833-11	METAL CHIP	10K	5%	1/16W
R649	1-216-821-11	METAL CHIP	1K	5%	1/16W
R650	1-216-833-11	METAL CHIP	10K	5%	1/16W
R651	1-216-833-11	METAL CHIP	10K	5%	1/16W (EXCEPT HK)
R652	1-216-833-11	METAL CHIP	10K	5%	1/16W
R653	1-216-833-11	METAL CHIP	10K	5%	1/16W (EXCEPT HK)
R655	1-216-833-11	METAL CHIP	10K	5%	1/16W (CN)
R658	1-216-833-11	METAL CHIP	10K	5%	1/16W (EXCEPT HK)
R659	1-216-833-11	METAL CHIP	10K	5%	1/16W
R662	1-216-833-11	METAL CHIP	10K	5%	1/16W
R663	1-216-833-11	METAL CHIP	10K	5%	1/16W(CN)
R664	1-216-833-11	METAL CHIP	10K	5%	1/16W(HK)
R665	1-216-833-11	METAL CHIP	10K	5%	1/16W

MB-78

Ref. No.	Part No.	Description			Remarks
R666	1-216-821-11	METAL CHIP	1K	5%	1/16W
R668	1-216-833-11	METAL CHIP	10K	5%	1/16W
R669	1-216-829-11	METAL CHIP	4.7K	5%	1/16W
R672	1-216-833-11	METAL CHIP	10K	5%	1/16W
R674	1-216-809-11	METAL CHIP	100	5%	1/16W
R675	1-216-837-11	METAL CHIP	22K	5%	1/16W
R676	1-216-809-11	METAL CHIP	100	5%	1/16W
R677	1-216-809-11	METAL CHIP	100	5%	1/16W
R678	1-216-809-11	METAL CHIP	100	5%	1/16W
R679	1-216-809-11	METAL CHIP	100	5%	1/16W
R680	1-216-809-11	METAL CHIP	100	5%	1/16W
R681	1-216-809-11	METAL CHIP	100	5%	1/16W
R682	1-216-809-11	METAL CHIP	100	5%	1/16W
R683	1-216-864-11	METAL CHIP	0	5%	1/16W
R689	1-216-801-11	METAL CHIP	22	5%	1/16W
R690	1-216-801-11	METAL CHIP	22	5%	1/16W
R691	1-216-801-11	METAL CHIP	22	5%	1/16W
R692	1-216-801-11	METAL CHIP	22	5%	1/16W
R695	1-216-864-11	METAL CHIP	0	5%	1/16W
R696	1-216-841-11	METAL CHIP	47K	5%	1/16W
R797	1-216-864-11	METAL CHIP	0	5%	1/16W
R798	1-216-864-11	METAL CHIP	0	5%	1/16W
R801	1-216-809-11	METAL CHIP	100	5%	1/16W
R802	1-216-833-11	METAL CHIP	10K	5%	1/16W
R803	1-216-833-11	METAL CHIP	10K	5%	1/16W
R804	1-216-833-11	METAL CHIP	10K	5%	1/16W
R805	1-216-833-11	METAL CHIP	10K	5%	1/16W
R806	1-216-833-11	METAL CHIP	10K	5%	1/16W (EXCEPT HK)
R807	1-216-833-11	METAL CHIP	10K	5%	1/16W (E,HK,SP)
R809	1-216-833-11	METAL CHIP	10K	5%	1/16W
R810	1-216-833-11	METAL CHIP	10K	5%	1/16W
R812	1-216-833-11	METAL CHIP	10K	5%	1/16W
R813	1-216-833-11	METAL CHIP	10K	5%	1/16W
R815	1-216-864-11	METAL CHIP	0	5%	1/16W
R816	1-216-833-11	METAL CHIP	10K	5%	1/16W
R817	1-216-833-11	METAL CHIP	10K	5%	1/16W
R818	1-216-833-11	METAL CHIP	10K	5%	1/16W
R819	1-216-833-11	METAL CHIP	10K	5%	1/16W
R820	1-216-833-11	METAL CHIP	10K	5%	1/16W
R821	1-216-833-11	METAL CHIP	10K	5%	1/16W
R822	1-216-797-11	METAL CHIP	10	5%	1/16W
R824	1-216-797-11	METAL CHIP	10	5%	1/16W
R825	1-216-809-11	METAL CHIP	100	5%	1/16W
R826	1-216-797-11	METAL CHIP	10	5%	1/16W
R827	1-216-797-11	METAL CHIP	10	5%	1/16W
R828	1-216-805-11	METAL CHIP	47	5%	1/16W
R829	1-216-864-11	METAL CHIP	0	5%	1/16W
R830	1-216-864-11	METAL CHIP	0	5%	1/16W
R831	1-216-864-11	METAL CHIP	0	5%	1/16W
R832	1-216-805-11	METAL CHIP	47	5%	1/16W
R834	1-216-809-11	METAL CHIP	100	5%	1/16W
R835	1-216-809-11	METAL CHIP	100	5%	1/16W
R836	1-216-809-11	METAL CHIP	100	5%	1/16W
R837	1-216-809-11	METAL CHIP	100	5%	1/16W
R838	1-216-833-11	METAL CHIP	10K	5%	1/16W
R839	1-216-857-11	METAL CHIP	1M	5%	1/16W
R840	1-216-864-11	METAL CHIP	0	5%	1/16W
R842	1-216-801-11	METAL CHIP	22	5%	1/16W
R843	1-218-881-11	RES,CHIP	27K	0.50%	1/16W
R844	1-218-847-11	RES,CHIP	1K	0.50%	1/16W
R845	1-218-885-11	RES,CHIP	39K	0.50%	1/16W
R847	1-216-833-11	METAL CHIP	10K	5%	1/16W
R848	1-216-864-11	METAL CHIP	0	5%	1/16W
R849	1-218-831-11	RES,CHIP	220	0.50%	1/16W
R850	1-218-853-11	RES,CHIP	1.8K	0.50%	1/16W
R851	1-218-855-11	RES,CHIP	2.2K	0.50%	1/16W
R852	1-218-871-11	RES,CHIP	10K	0.50%	1/16W
R853	1-218-871-11	RES,CHIP	10K	0.50%	1/16W
R854	1-216-809-11	METAL CHIP	100	5%	1/16W
R855	1-216-833-11	METAL CHIP	10K	5%	1/16W
R856	1-216-837-11	METAL CHIP	22K	5%	1/16W
R857	1-216-825-11	METAL CHIP	2.2K	5%	1/16W
R858	1-216-838-11	METAL CHIP	27K	5%	1/16W
R859	1-216-825-11	METAL CHIP	2.2K	5%	1/16W
R860	1-216-821-11	METAL CHIP	1K	5%	1/16W
R861	1-216-833-11	METAL CHIP	10K	5%	1/16W
R862	1-216-833-11	METAL CHIP	10K	5%	1/16W
R863	1-216-809-11	METAL CHIP	100	5%	1/16W
R864	1-216-809-11	METAL CHIP	100	5%	1/16W
R865	1-216-809-11	METAL CHIP	100	5%	1/16W
R868	1-216-864-11	METAL CHIP	0	5%	1/16W
R869	1-216-864-11	METAL CHIP	0	5%	1/16W
R870	1-216-864-11	METAL CHIP	0	5%	1/16W
R871	1-216-833-11	METAL CHIP	10K	5%	1/16W
R872	1-216-809-11	METAL CHIP	100	5%	1/16W
R873	1-216-809-11	METAL CHIP	100	5%	1/16W
R874	1-216-809-11	METAL CHIP	100	5%	1/16W
R875	1-216-809-11	METAL CHIP	100	5%	1/16W
R876	1-216-809-11	METAL CHIP	100	5%	1/16W
R877	1-216-809-11	METAL CHIP	100	5%	1/16W
R878	1-216-833-11	METAL CHIP	10K	5%	1/16W
R880	1-216-864-11	METAL CHIP	0	5%	1/16W
R882	1-216-864-11	METAL CHIP	0	5%	1/16W
R883	1-216-864-11	METAL CHIP	0	5%	1/16W
R884	1-216-833-11	METAL CHIP	10K	5%	1/16W
R885	1-216-864-11	METAL CHIP	0	5%	1/16W
R889	1-216-833-11	METAL CHIP	10K	5%	1/16W
R890	1-216-833-11	METAL CHIP	10K	5%	1/16W
R891	1-216-833-11	METAL CHIP	10K	5%	1/16W
R892	1-216-833-11	METAL CHIP	10K	5%	1/16W
R897	1-216-864-11	METAL CHIP	0	5%	1/16W
R898	1-216-864-11	METAL CHIP	0	5%	1/16W
R899	1-216-864-11	METAL CHIP	0	5%	1/16W
R900	1-216-864-11	METAL CHIP	0	5%	1/16W
R901	1-216-864-11	METAL CHIP	0	5%	1/16W
R907	1-216-864-11	METAL CHIP	0	5%	1/16W
R908	1-216-833-11	METAL CHIP	10K	5%	1/16W
R911	1-216-809-11	METAL CHIP	100	5%	1/16W
R912	1-216-825-11	METAL CHIP	2.2K	5%	1/16W
R913	1-216-833-11	METAL CHIP	10K	5%	1/16W (HK)
R915	1-216-833-11	METAL CHIP	10K	5%	1/16W
R918	1-216-833-11	METAL CHIP	10K	5%	1/16W
R919	1-216-809-11	METAL CHIP	100	5%	1/16W
R920	1-216-809-11	METAL CHIP	100	5%	1/16W

Ref. No.	Part No.	Description			Remarks
R921	1-216-809-11	METAL CHIP	100	5%	1/16W
R922	1-216-817-11	METAL CHIP	470	5%	1/16W
R923	1-216-833-11	METAL CHIP	10K	5%	1/16W
R924	1-218-289-11	RES,CHIP	510	5%	1/16W
R926	1-216-864-11	METAL CHIP	0	5%	1/16W
R927	1-216-864-11	METAL CHIP	0	5%	1/16W
R929	1-216-864-11	METAL CHIP	0	5%	1/16W
R930	1-216-864-11	METAL CHIP	0	5%	1/16W
R932	1-216-809-11	METAL CHIP	100	5%	1/16W

< VARIABLE RESISTOR >

Ref. No.	Part No.	Description	Remarks
RV251	1-238-663-11	RES, ADJ, CARBON 4.7K	

< VIBRATOR >

Ref. No.	Part No.	Description	Remarks
X201	1-767-860-21	VIBRATOR, CRYSTAL 27MHz	
X601	1-767-359-11	VIBRATOR, CERAMIC 4MHz	
X801	1-767-861-21	VIBRATOR, CRYSTAL 20MHz	

---

* A-6065-065-A TK-47(B) BOARD, COMPLETE
****

(Ref.No.: 3,000 Series)

< CAPACITOR >

Ref. No.	Part No.	Description			Remarks
C001	1-164-232-11	CERAMIC CHIP	0.01uF		50V
C003	1-163-038-91	CERAMIC CHIP	0.1uF		25V
C004	1-163-038-91	CERAMIC CHIP	0.1uF		25V
C005	1-163-038-91	CERAMIC CHIP	0.1uF		25V
C006	1-126-205-11	ELECT CHIP	47uF	20%	6.3V
C007	1-163-235-11	CERAMIC CHIP	22PF	5%	50V
C008	1-163-235-11	CERAMIC CHIP	22PF	5%	50V
C009	1-163-235-11	CERAMIC CHIP	22PF	5%	50V
C010	1-163-235-11	CERAMIC CHIP	22PF	5%	50V
C011	1-164-232-11	CERAMIC CHIP	0.01uF		50V
C028	1-124-779-00	ELECT CHIP	10uF	20%	16V
C030	1-124-779-00	ELECT CHIP	10uF	20%	16V
C031	1-164-161-11	CERAMIC CHIP	0.0022uF	10%	100V
C032	1-124-779-00	ELECT CHIP	10uF	20%	16V
C033	1-164-161-11	CERAMIC CHIP	0.0022uF	10%	100V
C034	1-124-779-00	ELECT CHIP	10uF	20%	16V
C035	1-164-161-11	CERAMIC CHIP	0.0022uF	10%	100V
C036	1-124-779-00	ELECT CHIP	10uF	20%	16V
C037	1-163-009-11	CERAMIC CHIP	0.001uF	10%	50V
C038	1-164-161-11	CERAMIC CHIP	0.0022uF	10%	100V
C040	1-164-232-11	CERAMIC CHIP	0.01uF		50V
C042	1-163-989-11	CERAMIC CHIP	0.033uF	10%	25V
C043	1-163-135-00	CERAMIC CHIP	560PF	5%	50V
C046	1-163-018-00	CERAMIC CHIP	0.0056uF	5%	50V
C047	1-163-018-00	CERAMIC CHIP	0.0056uF	5%	50V
C050	1-107-725-11	CERAMIC CHIP	0.1uF	10%	16V
C051	1-107-725-11	CERAMIC CHIP	0.1uF	10%	16V
C052	1-164-232-11	CERAMIC CHIP	0.01uF		50V
C053	1-107-725-11	CERAMIC CHIP	0.1uF	10%	16V
C054	1-107-725-11	CERAMIC CHIP	0.1uF	10%	16V
C055	1-163-809-11	CERAMIC CHIP	0.047uF	10%	25V
C056	1-107-725-11	CERAMIC CHIP	0.1uF	10%	16V
C058	1-124-779-00	ELECT CHIP	10uF	20%	16V
C059	1-163-009-11	CERAMIC CHIP	0.001uF	10%	50V
C060	1-163-989-11	CERAMIC CHIP	0.033uF	10%	25V
C061	1-163-989-11	CERAMIC CHIP	0.033uF	10%	25V
C062	1-124-779-00	ELECT CHIP	10uF	20%	16V
C064	1-124-779-00	ELECT CHIP	10uF	20%	16V
C065	1-109-982-11	CERAMIC CHIP	1uF	10%	10V
C066	1-164-232-11	CERAMIC CHIP	0.01uF		50V
C067	1-163-809-11	CERAMIC CHIP	0.047uF	10%	25V
C068	1-163-121-00	CERAMIC CHIP	150PF	5%	50V
C069	1-163-005-11	CERAMIC CHIP	470PF	10%	50V
C070	1-164-232-11	CERAMIC CHIP	0.01uF		50V
C071	1-126-205-11	ELECT CHIP	47uF	20%	6.3V
C072	1-163-038-91	CERAMIC CHIP	0.1uF		25V
C073	1-126-205-11	ELECT CHIP	47uF	20%	6.3V
C074	1-163-038-91	CERAMIC CHIP	0.1uF		25V
C075	1-163-038-91	CERAMIC CHIP	0.1uF		25V
C076	1-164-232-11	CERAMIC CHIP	0.01uF		50V
C077	1-126-205-11	ELECT CHIP	47uF	20%	6.3V
C078	1-163-038-91	CERAMIC CHIP	0.1uF		25V
C079	1-107-725-11	CERAMIC CHIP	0.1uF	10%	16V
C082	1-164-232-11	CERAMIC CHIP	0.01uF		50V
C083	1-163-009-11	CERAMIC CHIP	0.001uF	10%	50V
C084	1-164-232-11	CERAMIC CHIP	0.01uF		50V
C085	1-164-232-11	CERAMIC CHIP	0.01uF		50V
C096	1-163-038-91	CERAMIC CHIP	0.1uF		25V
C097	1-163-038-91	CERAMIC CHIP	0.1uF		25V
C098	1-164-232-11	CERAMIC CHIP	0.01uF		50V
C099	1-163-019-00	CERAMIC CHIP	0.0068uF	10%	50V
C100	1-164-232-11	CERAMIC CHIP	0.01uF		50V
C101	1-164-232-11	CERAMIC CHIP	0.01uF		50V
C102	1-164-232-11	CERAMIC CHIP	0.01uF		50V
C103	1-164-232-11	CERAMIC CHIP	0.01uF		50V
C104	1-126-205-11	ELECT CHIP	47uF	20%	6.3V
C105	1-164-232-11	CERAMIC CHIP	0.01uF		50V
C106	1-164-232-11	CERAMIC CHIP	0.01uF		50V
C107	1-126-205-11	ELECT CHIP	47uF	20%	6.3V
C201	1-165-319-11	CERAMIC CHIP	0.1uF		50V
C202	1-164-232-11	CERAMIC CHIP	0.01uF		50V
C203	1-165-319-11	CERAMIC CHIP	0.1uF		50V

< CONNECTOR >

Ref. No.	Part No.	Description	Remarks
CN001	1-779-342-21	CONNECTOR, FFC/FPC 42P	
* CN002	1-695-154-11	SOCKET, CONNECTOR 18P	
CN004	1-580-055-21	PIN, CONNECTOR 2P	
CN005	1-784-326-11	CONNECTOR (FFC) 27P	
CN008	1-784-326-11	CONNECTOR (FFC) 27P	
CN201	1-774-653-21	PIN, CONNECTOR (PC BOARD) 3P	

< DIODE >

Ref. No.	Part No.	Description	Remarks
D003	8-719-421-27	DIODE MA728	
D004	8-719-104-34	DIODE 1S2836	

< IC >

Ref. No.	Part No.	Description	Remarks
IC004	8-759-701-39	IC NJM3404AM	
IC005	8-752-079-86	IC CXA2555Q-T4	
IC006	8-759-487-01	IC SSI33P3720A-CGT	
IC011	8-759-009-07	IC MC14053BFEL	
IC201	8-759-947-34	IC LM35DZ	

TK-47 POWER BLOCK HS-930SH

Ref. No.	Part No.	Description			Remarks
IC202	8-759-058-43	IC NJM3404AV(TE2)			
		< COIL >			
L002	1-412-031-11	INDUCTOR CHIP 47uH			
L003	1-412-031-11	INDUCTOR CHIP 47uH			
L004	1-412-031-11	INDUCTOR CHIP 47uH			
L201	1-412-943-11	INDUCTOR 2.2uH			
		< PHOTO INTERRUPTER >			
PH001	8-749-011-97	PHOTO INTERUPTER GP1S93			
		< TRANSISTOR >			
Q001	8-729-420-24	TRANSISTOR 2SB1218A-QRS			
Q004	8-729-805-25	TRANSISTOR 2SB1121			
Q005	8-729-805-25	TRANSISTOR 2SB1121			
Q007	8-729-805-25	TRANSISTOR 2SB1121			
Q008	8-729-230-63	TRANSISTOR 2SC4116-YG			
Q009	8-729-015-76	TRANSISTOR UN5211-TX			
Q010	8-729-230-63	TRANSISTOR 2SC4116-YG			
		< RESISTOR >			
R001	1-216-025-91	RES,CHIP	100	5%	1/10W
R002	1-208-757-11	RES,CHIP	91	0.50%	1/10W
R003	1-216-037-00	METAL CHIP	330	5%	1/10W
R005	1-216-089-91	RES,CHIP	47K	5%	1/10W
R013	1-216-089-91	RES,CHIP	47K	5%	1/10W
R015	1-216-073-00	METAL CHIP	10K	5%	1/10W
R016	1-216-001-00	METAL CHIP	10	5%	1/10W
R017	1-216-001-00	METAL CHIP	10	5%	1/10W
R049	1-216-154-00	RES,CHIP	15	5%	1/8W
R051	1-216-049-91	RES,CHIP	1K	5%	1/10W
R052	1-216-001-00	METAL CHIP	10	5%	1/10W
R053	1-216-041-00	METAL CHIP	470	5%	1/10W
R064	1-216-047-91	RES,CHIP	820	5%	1/10W
R066	1-216-035-00	METAL CHIP	270	5%	1/10W
R068	1-216-295-91	SHORT 0			
R070	1-216-097-91	RES,CHIP	100K	5%	1/10W
R072	1-216-097-91	RES,CHIP	100K	5%	1/10W
R073	1-216-075-00	METAL CHIP	12K	5%	1/10W
R075	1-216-109-00	METAL CHIP	330K	5%	1/10W
R077	1-216-001-00	METAL CHIP	10	5%	1/10W
R079	1-216-154-00	RES,CHIP	15	5%	1/8W
R084	1-216-121-91	RES,CHIP	1M	5%	1/10W
R086	1-216-295-91	SHORT 0			
R090	1-216-089-91	RES,CHIP	47K	5%	1/10W
R091	1-216-073-00	METAL CHIP	10K	5%	1/10W
R092	1-216-037-00	METAL CHIP	330	5%	1/10W
R093	1-216-025-91	RES,CHIP	100	5%	1/10W
R094	1-216-073-00	METAL CHIP	10K	5%	1/10W
R095	1-216-073-00	METAL CHIP	10K	5%	1/10W
R100	1-216-049-91	RES,CHIP	1K	5%	1/10W
R101	1-216-081-00	METAL CHIP	22K	5%	1/10W
R102	1-216-081-00	METAL CHIP	22K	5%	1/10W
R103	1-216-049-91	RES,CHIP	1K	5%	1/10W
R104	1-216-081-00	METAL CHIP	22K	5%	1/10W
R105	1-216-109-00	METAL CHIP	330K	5%	1/10W
R111	1-216-073-00	METAL CHIP	10K	5%	1/10W
R112	1-216-113-00	METAL CHIP	470K	5%	1/10W
R113	1-216-057-00	METAL CHIP	2.2K	5%	1/10W
R149	1-216-073-00	METAL CHIP	10K	5%	1/10W
R150	1-216-081-00	METAL CHIP	22K	5%	1/10W
R151	1-216-059-00	METAL CHIP	2.7K	5%	1/10W
R152	1-216-077-00	METAL CHIP	15K	5%	1/10W
R153	1-216-093-00	METAL CHIP	68K	5%	1/10W
R154	1-216-081-00	METAL CHIP	22K	5%	1/10W
R155	1-216-081-00	METAL CHIP	22K	5%	1/10W
R156	1-216-091-00	METAL CHIP	56K	5%	1/10W
R157	1-216-091-00	METAL CHIP	56K	5%	1/10W
R158	1-216-093-00	METAL CHIP	68K	5%	1/10W
R159	1-216-081-00	METAL CHIP	22K	5%	1/10W
R160	1-216-089-91	RES,CHIP	47K	5%	1/10W
R161	1-216-097-91	RES,CHIP	100K	5%	1/10W
R162	1-216-077-00	METAL CHIP	15K	5%	1/10W
R163	1-216-081-00	METAL CHIP	22K	5%	1/10W
R164	1-216-295-91	SHORT 0			
R165	1-216-295-91	SHORT 0			
R166	1-216-065-91	RES,CHIP	4.7K	5%	1/10W
R167	1-216-065-91	RES,CHIP	4.7K	5%	1/10W
R168	1-216-073-00	METAL CHIP	10K	5%	1/10W
R171	1-216-097-91	RES,CHIP	100K	5%	1/10W
R172	1-216-097-91	RES,CHIP	100K	5%	1/10W
R201	1-216-049-91	RES,CHIP	1K	5%	1/10W
R202	1-216-089-91	RES,CHIP	47K	5%	1/10W
R203	1-216-073-00	METAL CHIP	10K	5%	1/10W
R204	1-216-049-91	RES,CHIP	1K	5%	1/10W
R205	1-216-113-00	METAL CHIP	470K	5%	1/10W
R206	1-216-097-91	RES,CHIP	100K	5%	1/10W
R207	1-216-073-00	METAL CHIP	10K	5%	1/10W
R208	1-216-073-00	METAL CHIP	10K	5%	1/10W
R209	1-216-065-91	RES,CHIP	4.7K	5%	1/10W
		< SWITCH >			
S001	1-771-046-11	SWITCH, PUSH LEVER (TRAY)			

⚠ 1-468-287-21 POWER BLOCK HS-930SH (EXCEPT E)
****

(Ref.No.: 8,000 Series)

Ref. No.	Part No.	Description			Remarks
		< CAPACITOR >			
C110	9-880-441-01	ELECT	120uF	250V	
C114	1-107-967-11	ELECT	1uF	400V	
C211	1-111-087-11	ELECT	330uF	35V	
C212	1-126-947-11	ELECT	47uF	35V	
C213	1-126-947-11	ELECT	47uF	35V	
C214	1-126-947-11	ELECT	47uF	35V	
C301	1-126-960-11	ELECT	1uF	50V	
C311	1-111-087-11	ELECT	330uF	35V	
C312	1-111-087-11	ELECT	330uF	35V	
C313	1-126-947-11	ELECT	47uF	35V	
C314	1-126-948-11	ELECT	100uF	35V	
C315	1-126-954-11	ELECT	10uF	50V	
C411	1-126-947-11	ELECT	47uF	35V	
C511	1-126-942-11	ELECT	1000uF	25V	
C512	1-126-947-11	ELECT	47uF	35V	

Note : The components identified by mark ⚠ or dotted line with mark ⚠ are critical for safety. Replace only with part number specified.

Ref. No.	Part No.	Description			Remarks
C513	1-126-947-11	ELECT	47uF	35V	
C611	1-111-090-11	ELECT	560uF	35V	
C612	1-126-947-11	ELECT	47uF	35V	
		< DIODE >			
D101	8-719-064-12	DIODE	S1NB60		
D102	8-719-100-77	DIODE	RD		
D104	8-719-109-57	DIODE	RD		
D105	9-980-073-01	DIODE	1SS270A		
D106	9-880-435-01	DIODE	D1N60		
D109	9-880-435-01	DIODE	D1N60		
D211	8-719-510-17	DIODE	S2LA20		
D212	8-719-100-90	DIODE	RD		
D311	8-719-500-50	DIODE	D3S4M		
D312	9-980-073-01	DIODE	1SS270A		
D313	8-719-109-60	DIODE	RD		
D511	8-719-510-17	DIODE	S2LA20		
D611	8-719-500-50	DIODE	D3S4M		
		< GROUND TERMINAL >			
FG101	1-537-738-11	GROUND TERMINAL			
FG201	1-537-738-11	GROUND TERMINAL			
		< FUSE >			
⚠F101	1-532-388-37	FUSE	2.0A	250V	
		< IC >			
IC301	8-759-420-19	IC	AN1431T		
IC611	9-880-443-01	IC	PQ3RD13		
		< PROTECTOR >			
⚠P211	1-533-589-11	PROTECTOR			
⚠P311	1-533-593-11	PROTECTOR			
⚠P312	1-533-589-11	PROTECTOR			
⚠P511	1-533-589-11	PROTECTOR			
		< PHOTOCOUPLER >			
PC101	8-749-010-59	PHOTOCOUPLER	TLP721F		
		< TRANSISTOR >			
Q101	9-880-444-01	TRANSISTOR	2SK2563		
Q102	8-729-024-00	TRANSISTOR	2SC3377		
Q103	9-880-444-01	TRANSISTOR	2SK2563		
Q211	9-880-445-01	TRANSISTOR	2SJ488		
Q311	8-724-921-42	TRANSISTOR	2SA1679		
Q312	8-729-920-69	TRANSISTOR	2SC1740S		
Q511	9-880-446-01	TRANSISTOR	2SK2279		
Q512	8-729-920-67	TRANSISTOR	2SA933S		
		< FUSIBLE >			
R152	1-219-121-21	FUSIBLE	0.22	1/4W	

Ref. No.	Part No.	Description			Remarks
⚠	1-468-287-31	POWER BLOCK HS-930SF (E)			
		**********************			
					(Ref.No.: 9,000 Series)
		< CAPACITOR >			
C110	9-880-447-01	ELECT	270uF	400V	
C114	1-107-967-11	ELECT	1uF	400V	
C211	1-111-087-11	ELECT	330uF	35V	
C212	1-126-947-11	ELECT	47uF	35V	
C213	1-126-947-11	ELECT	47uF	35V	
C214	1-126-947-11	ELECT	47uF	35V	
C301	1-126-960-11	ELECT	1uF	50V	
C311	1-111-087-11	ELECT	330uF	35V	
C312	1-111-087-11	ELECT	330uF	35V	
C313	1-126-947-11	ELECT	47uF	35V	
C314	1-126-948-11	ELECT	100uF	35V	
C315	1-126-954-11	ELECT	10uF	50V	
C411	1-126-947-11	ELECT	47uF	35V	
C511	1-126-942-11	ELECT	1000uF	25V	
C512	1-126-947-11	ELECT	47uF	35V	
C513	1-126-947-11	ELECT	47uF	35V	
C611	1-111-090-11	ELECT	560uF	35V	
C612	1-126-947-11	ELECT	47uF	35V	
		< DIODE >			
D101	8-719-064-12	DIODE	S1NB60		
D102	8-719-100-77	DIODE	RD		
D104	8-719-109-57	DIODE	RD		
D105	9-980-073-01	DIODE	1SS270A		
D106	9-880-448-01	DIODE	D1N60		
D109	9-880-448-01	DIODE	D1N60		
D211	8-719-510-17	DIODE	S2LA20		
D212	8-719-100-90	DIODE	RD		
D311	8-719-500-50	DIODE	D3S4M		
D312	9-980-073-01	DIODE	1SS270A		
D313	8-719-109-60	DIODE	RD		
D511	8-719-510-17	DIODE	S2LA20		
D611	8-719-500-50	DIODE	D3S4M		
		< GROUND TERMINAL >			
FG101	1-537-738-11	GROUND TERMINAL			
FG201	1-537-738-11	GROUND TERMINAL			
		< FUSE >			
⚠F101	1-532-388-31	FUSE	2.0A	250V	
		< IC >			
IC301	8-759-420-19	IC	AN1431T		
IC611	9-880-449-01	IC	PQ3RD13		
		< PROTECTOR >			
⚠P211	1-533-589-11	PROTECTOR			
⚠P311	1-533-593-11	PROTECTOR			
⚠P312	1-533-589-11	PROTECTOR			
⚠P511	1-533-589-11	PROTECTOR			

Note : The components identified by mark ⚠ or dotted line with mark ⚠ are critical for safety.
Replace only with part number specified.

POWER BLOCK HS-930SF

Ref. No.	Part No.	Description	Remarks
		< PHOTOCOUPLER >	
PC101	8-749-010-59	PHOTOCOUPLER TLP721F	
		< TRANSISTOR >	
Q101	9-880-450-01	TRANSISTOR 2SK2333	
Q102	8-729-024-00	TRANSISTOR 2SC3377	
Q103	9-880-450-01	TRANSISTOR 2SK2333	
Q211	9-880-451-01	TRANSISTOR 2SJ488	
Q311	8-724-921-42	TRANSISTOR 2SA1679	
Q312	8-729-920-69	TRANSISTOR 2SC1740S	
Q511	9-880-452-01	TRANSISTOR 2SK2279	
Q512	8-729-920-67	TRANSISTOR 2SA933S	
		< FUSIBLE >	
R152	1-219-121-21	FUSIBLE 0.22 1/4W	

MISCELLANEOUS
****

Ref. No.	Part No.	Description	Remarks
10	1-783-347-11	CABLE, FLAT (FML-7)	
13	1-475-685-11	ENCODER, ROTARY	
⚠55	1-468-287-21	POWER BLOCK HS-930SH (EXCEPT E)	
⚠55	1-468-287-31	POWER BLOCK HS-930SF (E)	
58	1-783-339-11	CABLE, FLAT (FMT-21)	
59	1-783-343-11	CABLE, FLAT (FMA-4)	
⚠63	1-782-001-61	CORD, POWER (EXCEPT CN)	
⚠63	1-782-692-31	CORD, POWER (CN)	
⚠207	8-820-005-02	DEVICE, OPTICAL KHS-180A/J1N	
212	1-783-341-11	CABLE, FLAT (FMF-28)	
FAN1	1-698-792-11	FAN, DC	
M501	X-3947-137-1	MOTOR ASSY, SLED	
M901	1-698-944-11	MOTOR, DC (SPINDLE)	
M902	X-3947-138-1	MOTOR ASSY, SKEW	
M903	1-698-942-21	MOTOR (LOADING)	

ACCESSORIES & PACKING MATERIALS
****

Ref. No.	Part No.	Description	Remarks
⚠	1-569-008-11	ADAPTOR, CONVERSION 2P (E)	
	1-575-334-11	CORD, CONNECTION (AV CONNECTION) 1.5m	
	1-575-335-21	CORD, CONNECTION (S VIDEO) 1.5m	
⚠	1-770-019-11	ADAPTOR, CONVERSION PLUG 3P (HK)	
	3-862-098-11	MANUAL, INSTRUCTION (ENGLISH, CHINESE)	
*	3-987-285-01	CUSHION	
*	3-987-313-01	INDIVIDUAL CARTON (CN)	
*	3-987-313-11	INDIVIDUAL CARTON (HK)	
*	3-987-313-21	INDIVIDUAL CARTON (E,SP)	

****
HARDWARE LIST
****

Ref. No.	Part No.	Description	Remarks
#1	7-685-647-79	SCREW +BVTP 3X10 TYPE2 IT-3	
#151	7-685-647-79	SCREW +BVTP 3X10 TYPE2 IT-3	
#152	7-627-852-08	SCREW,PRECISION +P 1.7X2.5	
#153	7-627-852-17	+P 1.7X4	
#154	7-685-105-19	TPG +P 2X8, TYPE 2, NON-SLIT	

Note : The components identified by mark ⚠ or dotted line with mark ⚠ are critical for safety.
Replace only with part number specified.

9-921-677-11

Sony Corporation
Home A&V Products Company

98C16096-1D
Printed in Japan ©1998.3
Published by General Engineering Dept.
(Osaki East)